HEADLIGHT GUARD

KTM 390, 790 & 890 ADVENTURE · 2020–ON

Thanks for choosing SRC. This 2 mm stainless steel guard hangs on SRC brackets that bolt to factory screw holes above and below the headlight, so there is no drilling or cutting. The guard sits on four pins with rubber grommets, so you can pull it off by hand to clean the headlight. Numbers in the drawings match the parts list.

IN THE KIT

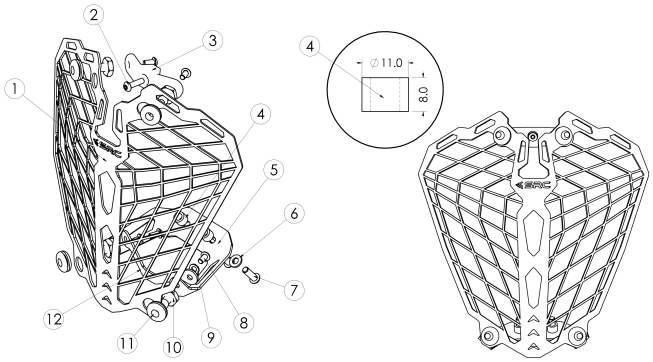

1	Headlight guard	**× 1**	**2**	M5 × 20 button head socket screw	**× 1**
3	Upper bracket	**× 1**	**4**	Delrin bush, 11 × 8 mm (M6)	**× 2**
5	Lower bracket	**× 1**	**6**	M6 washer	**× 2**
7	M6 × 20 button head socket screw	**× 2**	**8**	M5 × 10 button head socket screw	**× 4**
9	M5 washer	**× 2**	**10**	Mounting pin, 5 mm	**× 4**
11	Rubber grommet	**× 4**	**12**	Lower front bracket	**× 1**

"Stock" means a part already on your bike. The SRC screws 2 and 7 go into the three stock screw holes you empty in step 1; keep the stock screws. The circle shows the Delrin bush (4) size.

BEFORE YOU START

- Park the bike on level ground with the engine off and cool.
- **Blue thread locker** on screws 2, 7 and 8.
- Leave the bracket screws snug, not fully tight, until all brackets are in place.
- **Tools:** 3 mm and 4 mm hex keys (for the M5 and M6 button head screws), tool for the stock screws, torque wrench.
- **Time:** About 20 minutes.

SCAN TO WATCH

Official SRC install video
Headlight guard, KTM 390 Adventure
youtu.be/wk9NH7qTaVM

INSTALLATION

1 **Remove three stock screws:** the one at the top center, just below the windshield, and the two under the headlight, as shown in the picture. Keep them with your stock parts.

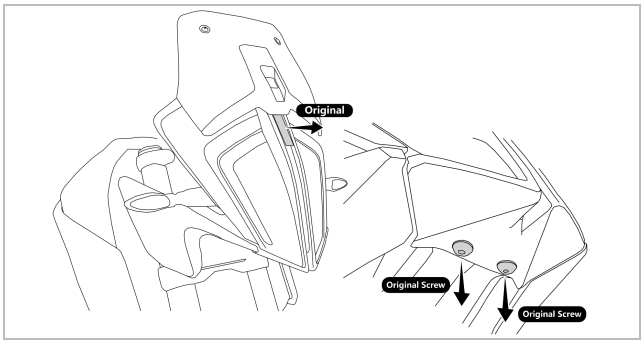

2 **Fit the upper bracket (3).** Fix a mounting pin (10) to each end of the bracket with an M5 × 10 screw (8) and thread locker. Then fix the bracket to the top center screw hole with the M5 × 20 screw (2) and thread locker, as shown in the picture. Snug only.

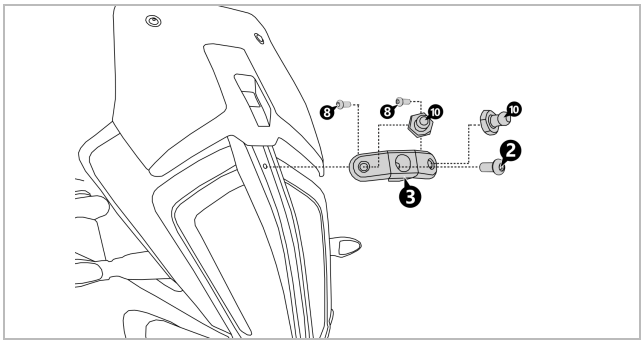

3 **Fit the lower brackets (5 and 12).** Hold the lower bracket (5) under the headlight with a Delrin bush (4) between it and each of the two screw holes. Fit an M6 × 20 screw (7) with an M6 washer (6) and thread locker through each hole. Join the lower front bracket (12) and the two lower mounting pins (10) with the two remaining M5 × 10 screws (8), M5 washers (9) and thread locker, as shown in the picture. Snug only.

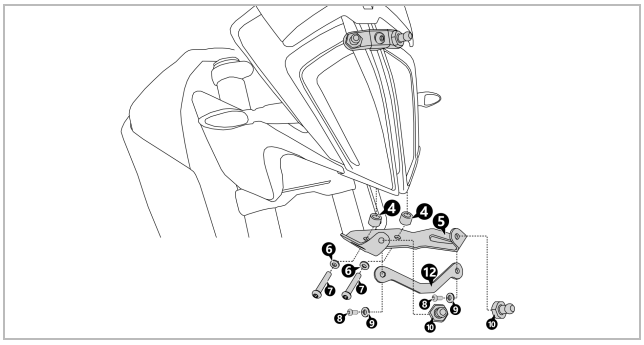

4 **Tighten, then hang the guard (1).** Check that the brackets sit evenly and tighten all bracket screws to the values in the table. Press a rubber grommet (11) into each of the guard's four mounting holes. Line the guard up with the four pins and push it on until every grommet seats fully over its pin, as shown in the picture.

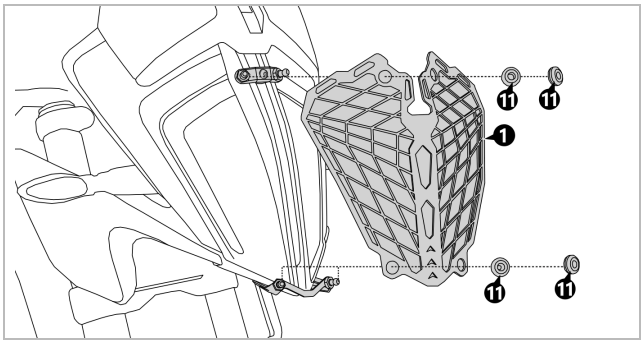

5 **Check the fit.** The guard should sit evenly on all four pins without touching the headlight, as shown in the picture of the finished install.

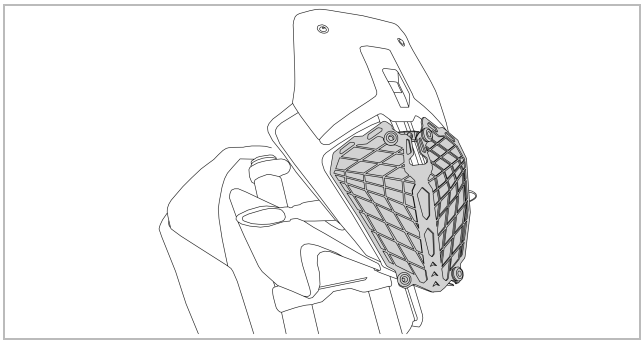

FASTENER	TORQUE
M5 screws (2, 8), thread locker	5 N·m (44 in-lb)
M6 × 20 screws (7), thread locker	10 N·m (89 in-lb)

FINAL CHECK

- All screws torqued with thread locker.
- Guard is firm on all four pins and doesn't touch the headlight lens.
- Turn the handlebars lock to lock: no cables or hoses catch on the brackets or guard.
- Headlight aim unchanged. Re-check every fastener after the first 30 miles (50 km), then at regular intervals.