HEADLIGHT GUARD

HONDA TRANSALP XL750 · 2023–2024

Thanks for choosing SRC. This 2 mm stainless steel guard hangs on two SRC brackets that bolt to factory mounting points, so there is no drilling or cutting. The guard sits on four pins with rubber grommets, so you can pull it off by hand to clean the headlight. Letters **A** to **D** in the drawings mark the work areas shown in step 1; numbers match the parts list. This guard does not fit the 2025–2026 Transalp, which has a different front end.

IN THE KIT

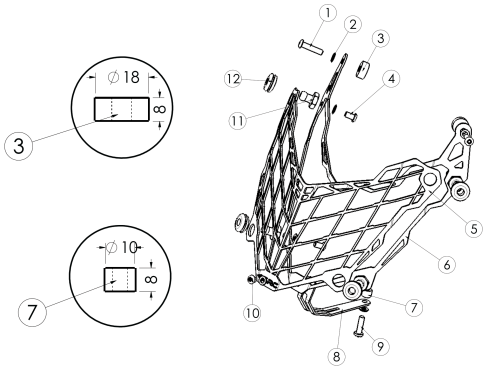

1	M5 × 25 button head socket screw	**× 2**	**2**	M5 washer	**× 8**
3	Delrin bush, 18 × 8 mm	**× 2**	**4**	M5 × 10 button head socket screw	**× 4**
5	Headlight guard	**× 1**	**6**	Guard bracket	**× 1**
7	Delrin bush, 10 × 8 mm	**× 1**	**8**	Lower bracket	**× 1**
9	M5 × 20 Phillips pan head screw	**× 1**	**10**	M5 × 6 button head socket screw	**× 1**
11	Mounting pin, 5 mm	**× 4**	**12**	Rubber grommet	**× 4**

Bush sizes are outside diameter × length (circles in the kit drawing). "Stock" means a part already on your bike. The SRC screws replace the three stock screws you remove; keep the stock ones.

BEFORE YOU START

- Park the bike on level ground with the engine off and cool.
- **Blue thread locker** on screws 1, 4, 9 and 10.
- Leave the bracket screws snug, not fully tight, until everything lines up.
- **Tools:** 3 mm hex key for the M5 button head screws, Phillips screwdriver, tool for the stock screws, torque wrench.
- **Time:** About 20 minutes.

SCAN TO WATCH

Official SRC install video
Headlight guard, Honda XL750 Transalp
youtu.be/QFw6DB2wVsQ

INSTALLATION

1 **Find the work areas, then remove one stock screw.** A is the center mount under the headlight, B the two screw holes beside the windshield, and C and D the four guard pins (left picture). In area A, remove the stock screw shown in the right picture and keep it.

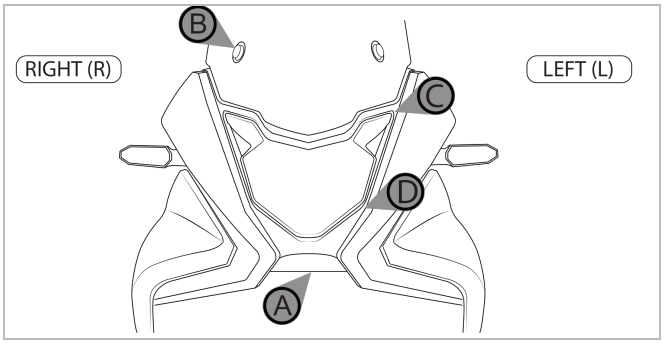

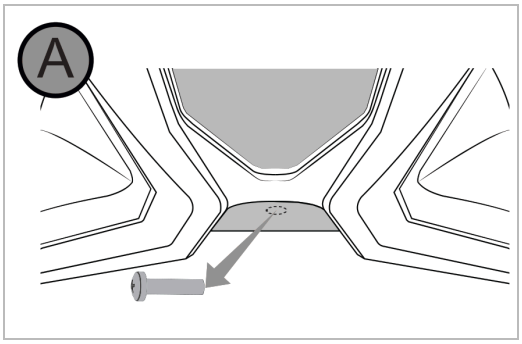

2 **Fit the lower bracket (8) in area A.** Push the M5 × 20 screw (9) with thread locker up through an M5 washer (2), the lower bracket and the Delrin bush (7), so the bush sits between the bracket and the bike. Thread it into the stock screw hole, as shown in the picture. Snug only.

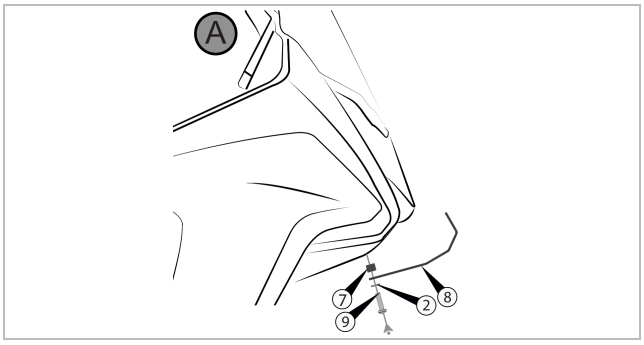

3 **Area B, both sides: remove the stock screw** beside the windshield, as shown in the picture. Keep both screws.

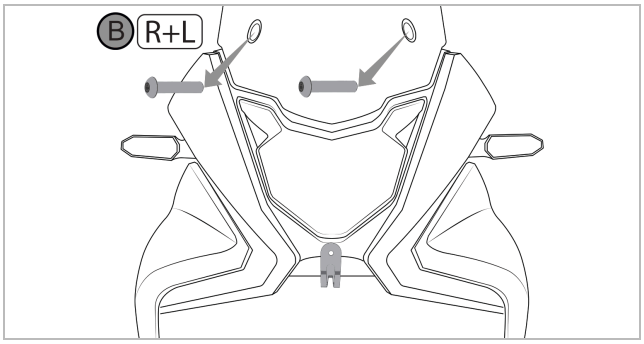

4 **Fit the guard bracket (6).** First check that the four mounting pins (11) are fitted to the bracket with the M5 × 10 screws (4) and thread locker, as in the kit drawing. Area B, both sides: push an M5 × 25 screw (1) with thread locker through an M5 washer (2), the bracket and a Delrin bush (3) into the stock screw hole (upper close-up). Area A: fit the M5 × 6 screw (10) with an M5 washer (2) and thread locker through the bracket into the lower bracket (8) (lower close-up). Check that the bracket sits evenly, then tighten all bracket screws to the value in the table.

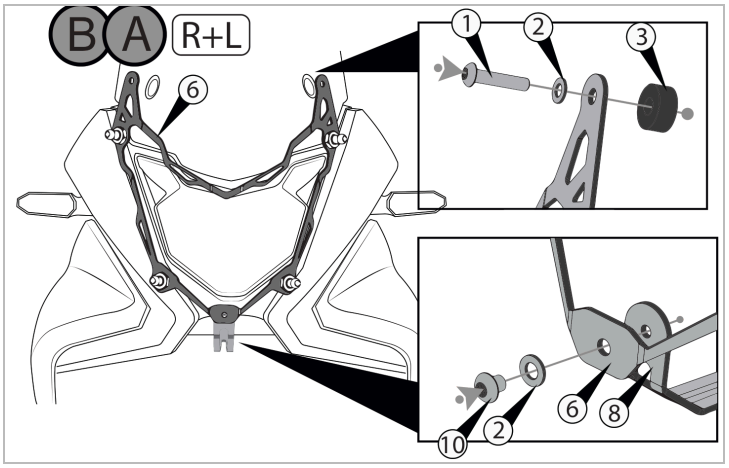

5 **Hang the guard (5).** Press a rubber grommet (12) into each of the guard's four mounting holes. Line the guard up with the four pins at C and D and push it on until every grommet seats fully over its pin, as shown in the picture (left: close-up of one pin). Make sure all four are seated correctly.

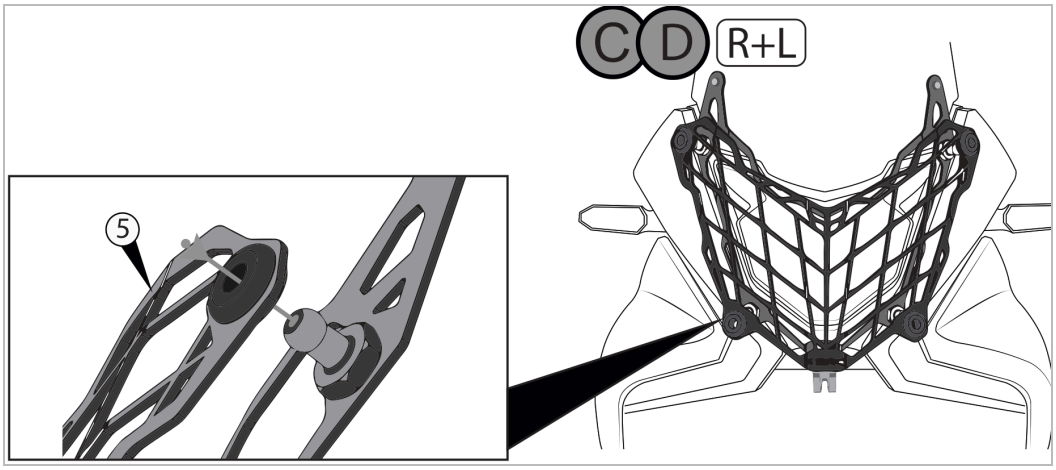

FASTENER	TORQUE
M5 button head screws (1, 4, 10), thread locker	5 N·m (44 in-lb)
M5 × 20 pan head screw (9), thread locker	5 N·m (44 in-lb)

FINAL CHECK

- All screws torqued with thread locker.
- Guard is firm on all four pins and doesn't touch the headlight lens.
- Turn the handlebars lock to lock: no cables or hoses catch on the brackets or guard.
- Headlight aim unchanged. Re-check every fastener after the first 30 miles (50 km), then at regular intervals.

SRC DESIGNS · Distributed in the USA by SRC Moto · Pendleton, OR · info@srcmoto.com · srcmoto.com

PART # H-XL750-01-01 (SILVER) / H-XL750-01-02 (BLACK)