SIDE STAND FOOT ENLARGER

KTM 390 ADVENTURE · 2020–ON

Thanks for choosing SRC. This three-plate kit (3 mm stainless steel and aluminum) clamps around the foot of your stock side stand and roughly doubles its footprint, so the bike won't sink into soft ground or hot pavement. No drilling or cutting. Numbers in the drawings match the parts list.

IN THE KIT

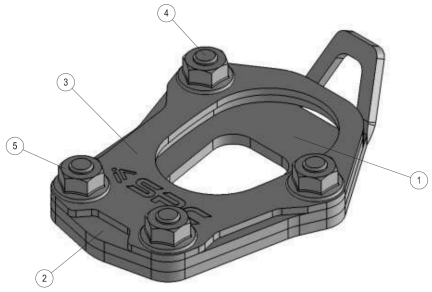



1	Low plate (with rear loop)	**× 1**	**2**	Middle plate	**× 1**
3	Top plate	**× 1**	**4**	M6 × 15 countersunk screw	**× 4**
5	M6 nut	**× 4**			

Left: assembled kit on its own. Right: the finished foot seen from above.

BEFORE YOU START

- Hold the bike upright on a center stand, paddock stand or with a helper, with the side stand swung down.
- Use **liquid thread locker** on the four M6 × 15 screws (4).
- All SRC hardware is metric.
- **Tools:** Hex key and wrench to fit the M6 screws and nuts, torque wrench.
- **Time:** About 15 minutes.

SCAN TO WATCH

Official SRC install video
Side stand foot enlarger, KTM 390 Adventure
youtu.be/vwTdtfA-MEo

INSTALLATION

1 **Fit the top plate (3).** Turn it as shown in the picture and slip it over the side stand, down onto the top of the stand foot.

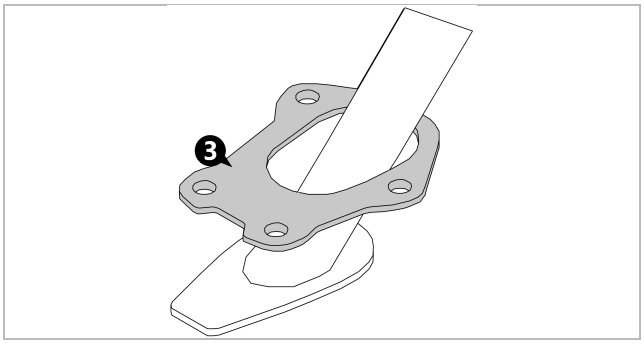

2 **Fit the middle plate (2)** around the stand foot, under the top plate, turned as shown in the picture. Line up the four mounting holes of both plates.

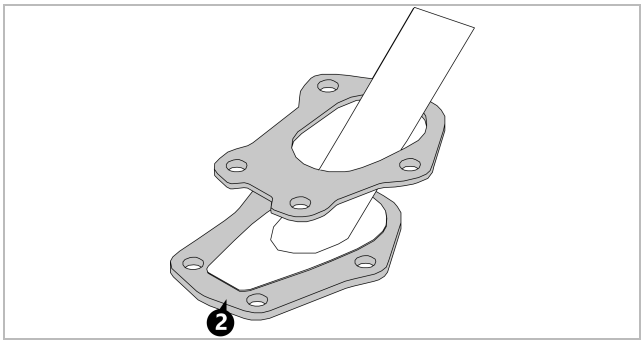

3 **Fit the low plate (1)** under the stand foot, with its loop at the rear, as shown in the picture. Line up the four mounting holes of all three plates.

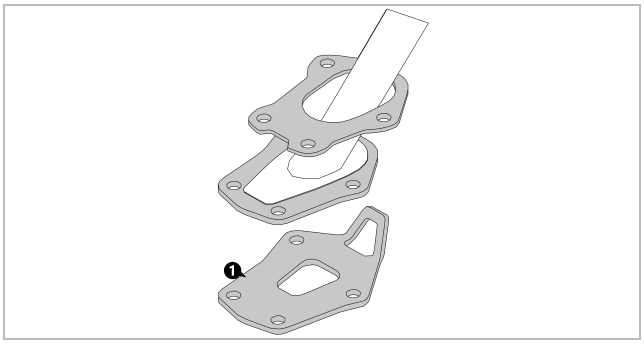

4 **Fit the screws (4) and nuts (5).** Hold the three plates together around the stand foot. Put thread locker on the M6 × 15 screws (4) and push them up through the holes from underneath, then run an M6 nut (5) onto each one, as shown in the picture. Tighten evenly in a crisscross pattern to **9.6 N·m (85 in-lb)**.

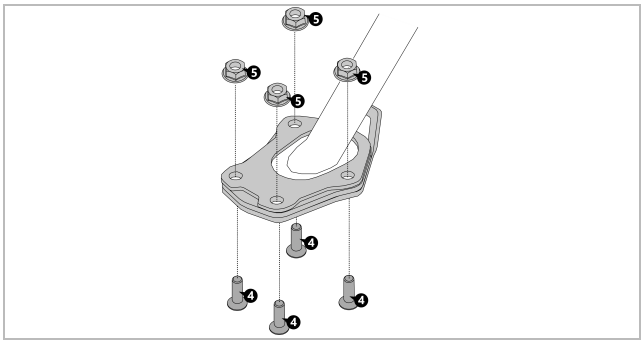

5 **Done.** The finished foot looks like the picture, with all four nuts tight and the plates clamped flat around the stand foot.

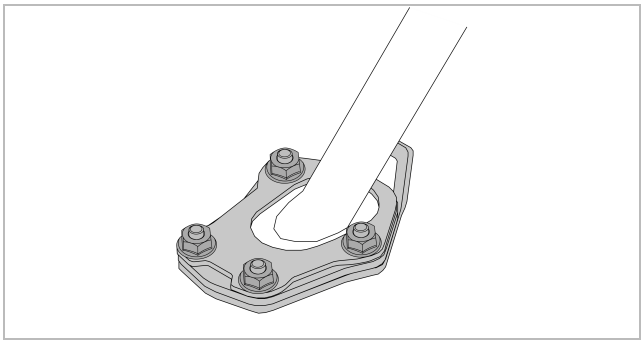

FASTENER	TORQUE
M6 × 15 countersunk screws (4) with M6 nuts (5), thread locker	9.6 N·m (85 in-lb)

FINAL CHECK

- All four nuts torqued with thread locker; the plates sit flat with no rattle.
- Flip the side stand up and down: it folds fully and clears the exhaust and frame.
- Re-check the nuts after the first 30 miles (50 km), then at regular service intervals.