Scope of Supply/Bill of Material & Mounting Drawings

Part Number:
Part Description: CRASH BAR FOR HONDA CB500X / 2019-2022

Installation / Parts List / Bill of Material for Mounting

NO.	Description	Quantity	Torque*(N-M)	Remarks**
1	Crash bar LH	1		
2	Crash bar RH	1		
3	Crash bar Low LH	1		
4	Crash bar Low RH	1		
5	Upper bracket	1		
6	Teflon bush OD16xiD11xL8	2		
7	Midle arm plate	2		
8	Ring AL OD25xID12xL5	1		
9	Sliders Guards	2		
10	End cap	4		
11	Socket button head screw M6x15	2		Use Liquid Thread Locker
12	Socket head cap screw M8x40	2		Use Liquid Thread Locker
13	Socket head cap screw M10x35	2		Use Liquid Thread Locker
14	Socket head cap screw M10x170	1		Use Liquid Thread Locker
15	Socket head cap screw M10x1.25 L60	2		Use Liquid Thread Locker
16	Socket head cap screw M10x1.25 L65	1		Use Liquid Thread Locker
17	Socket head cap screw M10x1.25 L75	1		Use Liquid Thread Locker
18	Hex flange nut M8	2		
19	Hex flange nut M10	1		
20	Washer M6	2		
21	Washer M8	2		
22	Washer M10	3		
SRC Design uses Metric System of Measurement and all dimensions in Millimeters				
Recommended to use the Torque specified in the table				
Denotes Usage of Liquid Thread Locker in specified Locations				

copyright By SRC
Design and Specification are subjected to change

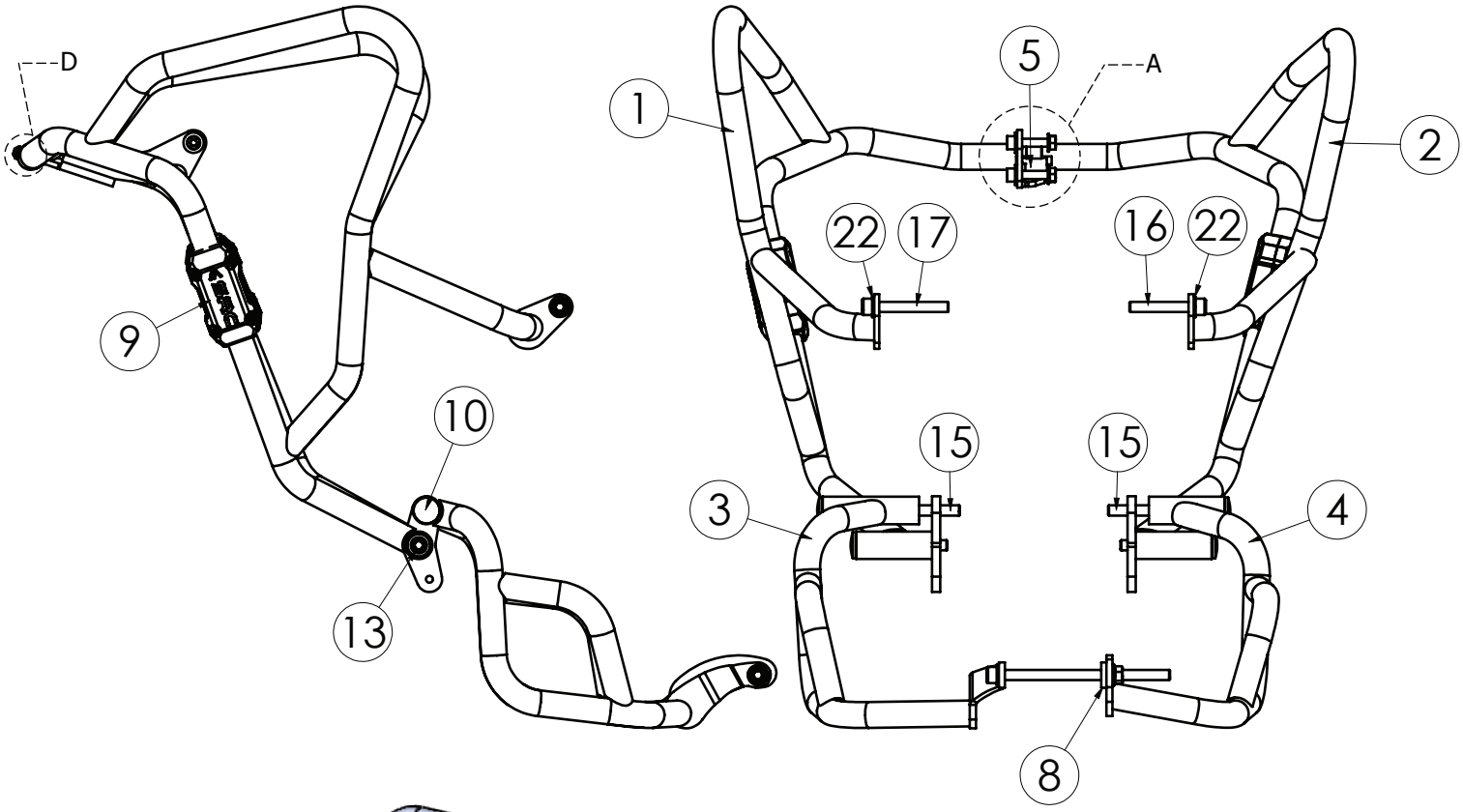

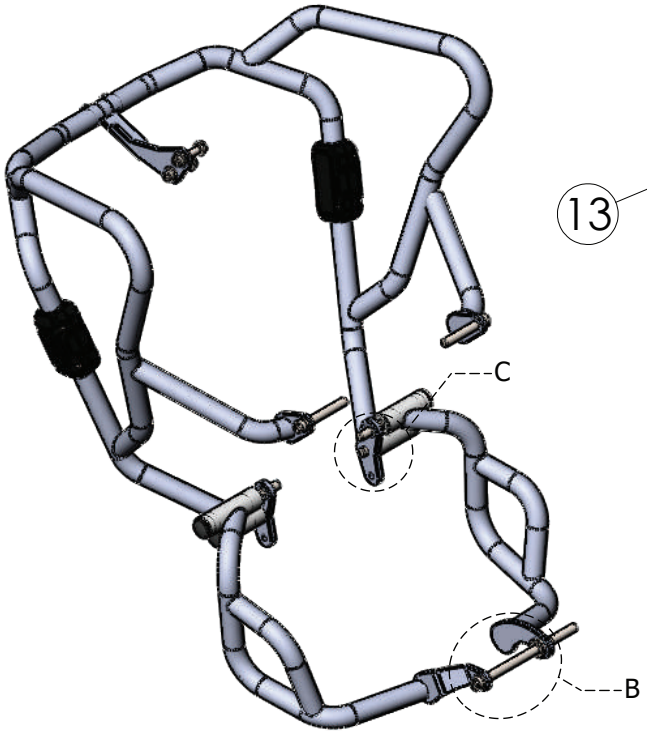

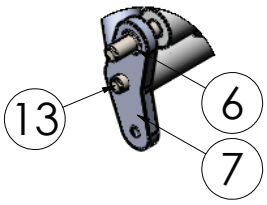

DETAIL C
SCALE 1:4

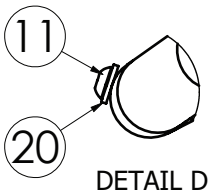

DETAIL D
SCALE 1:2

DETAIL B
SCALE 1:2

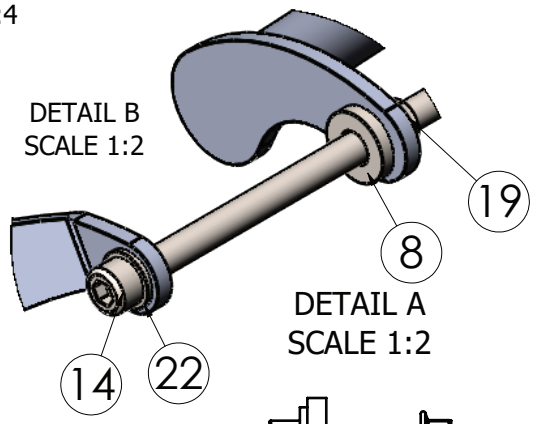

DETAIL A
SCALE 1:2

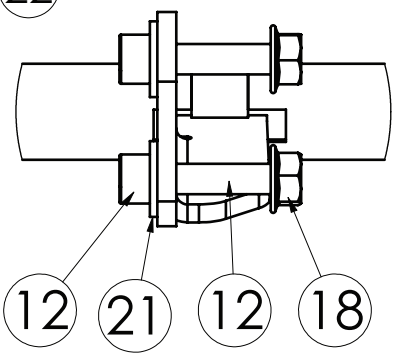

copyright By SRC
Design and Specification are subjected to change

Torque Values to be used in Mounting Instructions



code

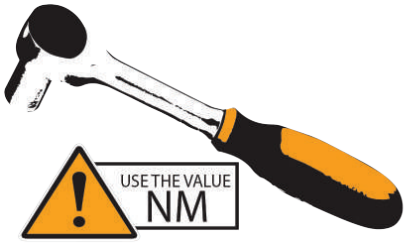

		M4		M5		M6		M8		M10		M12		M14		M16		M18	
	code	(cs)	(Fo)	(cs)	(Fo)	(cs)	(Fo)	(cs)	(Fo)	(cs)	(Fo)	(cs)	(Fo)	(cs)	(Fo)	(cs)	(Fo)	(cs)	(Fo)
Inox ▶	A2	2.6	—	5.1	—	8.7	—	21.2	—	42	—	73	—	118	—	180	—	258	—
steel ▶	8.8	3	3,594	5	5,886	10	8,302	23	15,242	46	24,275	79	35.401	127	48,618	198	66,955	283	83,746
steel ▶	10.9	4	5,279	8.1	8,645	14	12,194	34	22,388	67	35,655	116	51,995	187	71,408	291	98,340	402	119,454

Tensile load (Fo)
The force in newtons (N)which maintains pressure contact between assembled componets
Tightening torque (Cs)[values are in N-m]

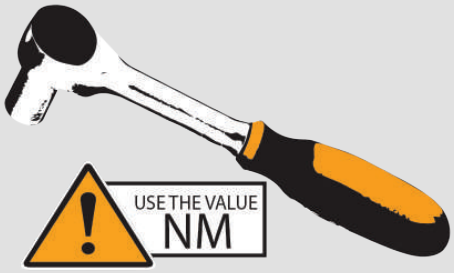

symbol (NM), refer to the reference value given in the table above for use in the required operation And safe in operation and accuracy in inserting parts.

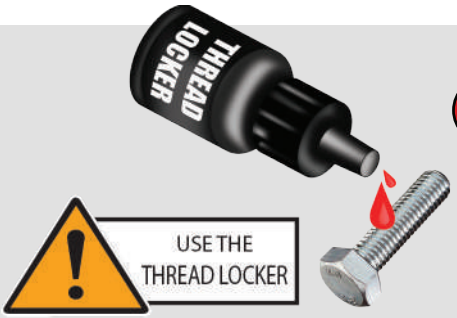

The tool in the picture is (thread locked).
When you see this mark,please insert the medicine to the point where the nut is to be inserted for the firmness and accuracy of the insertion work.

Please check and check again to make sure that all are inserted.
Every piece and don't forget any step to be safe.

copyright By SRC

Design and Specification are subjected to change

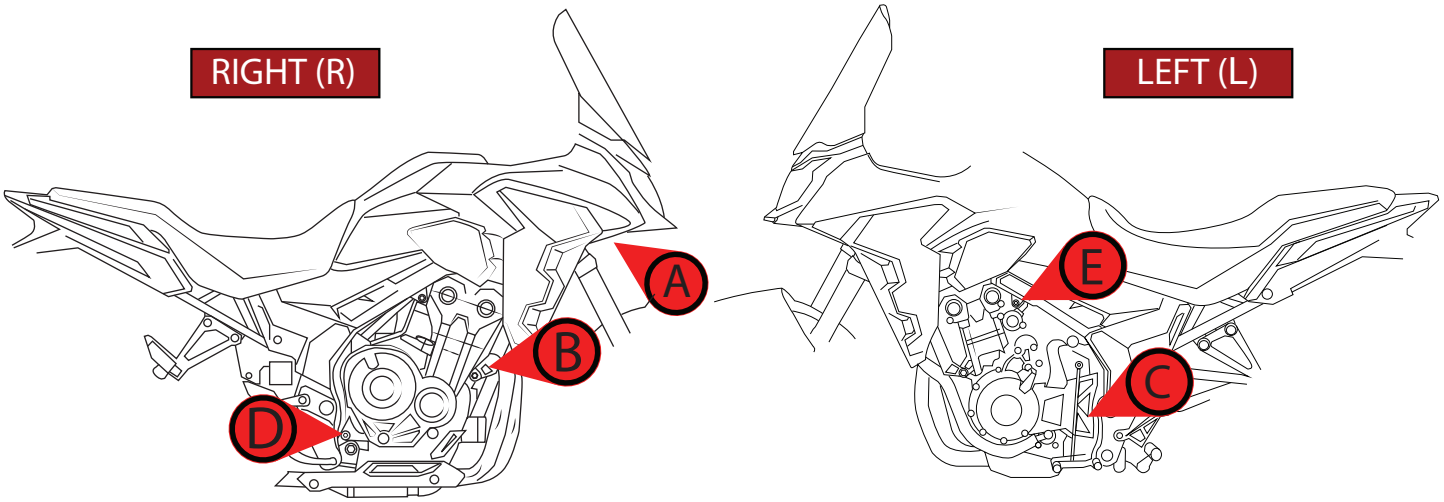

Step 1 LEFT RIGHT

Remove both original nuts.according to illustration

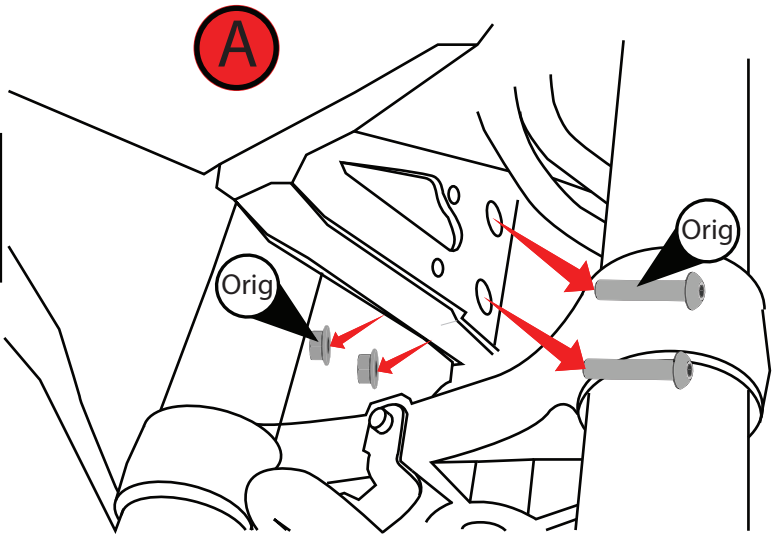

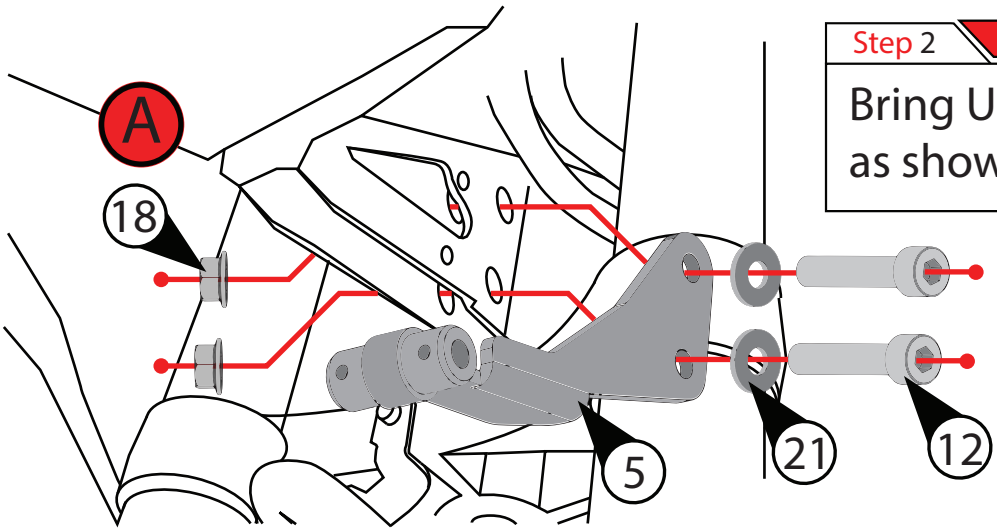

Step 2 LEFT RIGHT

Bring Upper bracket and nut as shown in the illustration

copyright By SRC
Design and Specification are subjected to change

Step 3 LEFT RIGHT

Remove the original Bolt, both left - right.

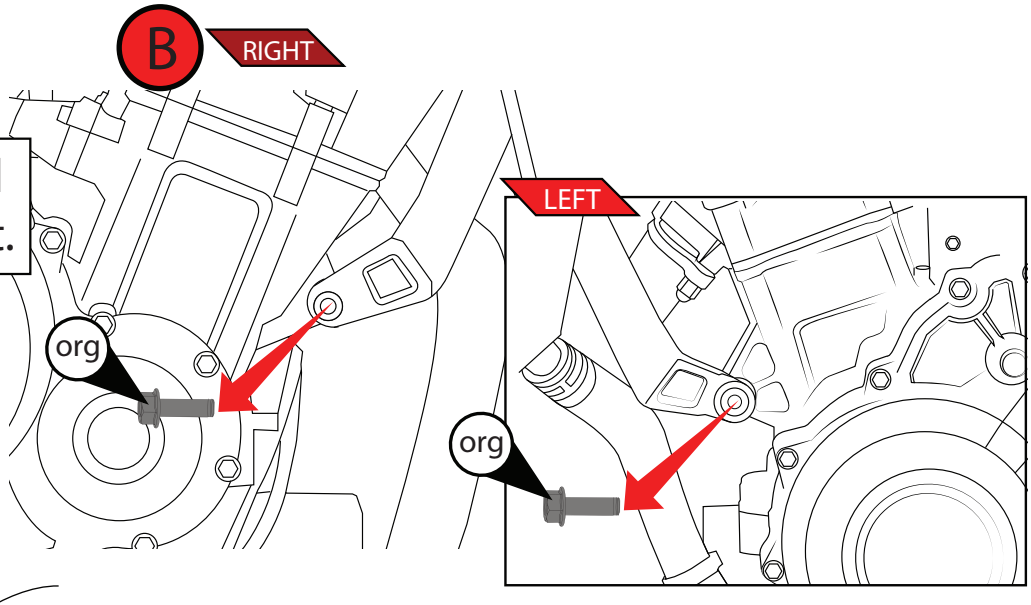

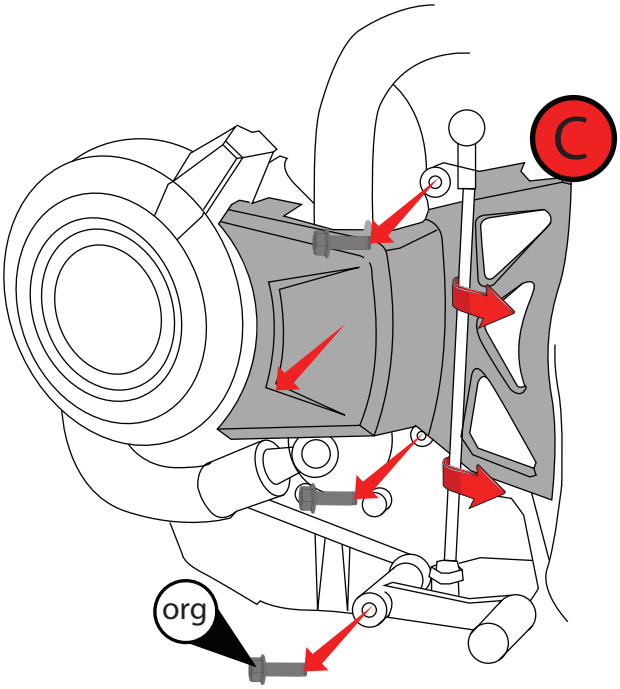

Step 4 LEFT

Left side
Remove the original Bolt and chain cover Shown in the illustration

Step 5 LEFT RIGHT

Remove the original Bolt, both left - right. Shown in the illustration

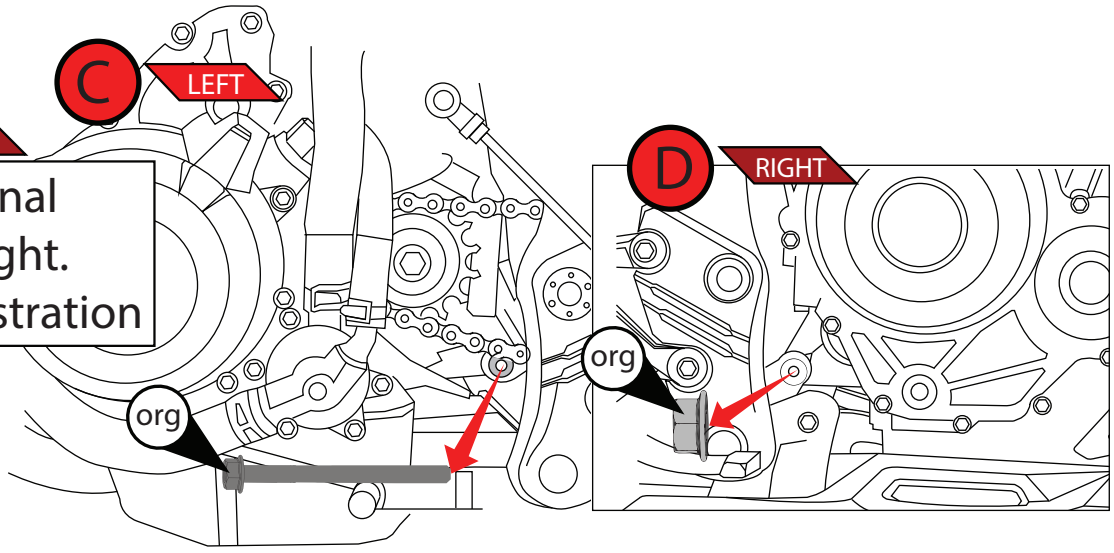

copyright By SRC
Design and Specification are subjected to change

Step 6 LEFT

Install (LEFT)
CRASH BAR , Washer , Bolt
as illustrate

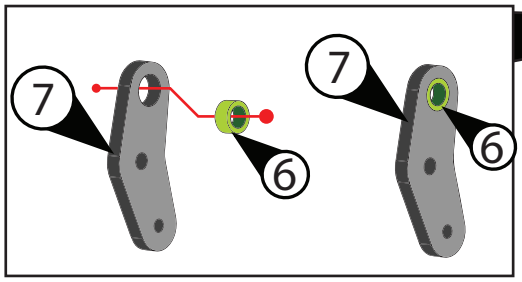

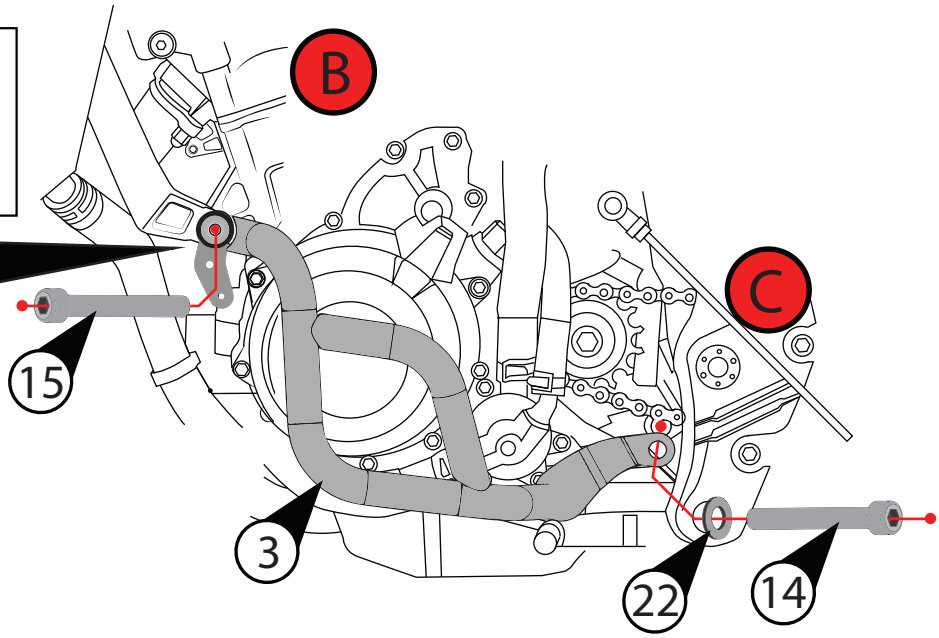

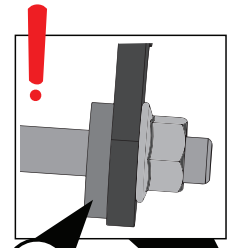

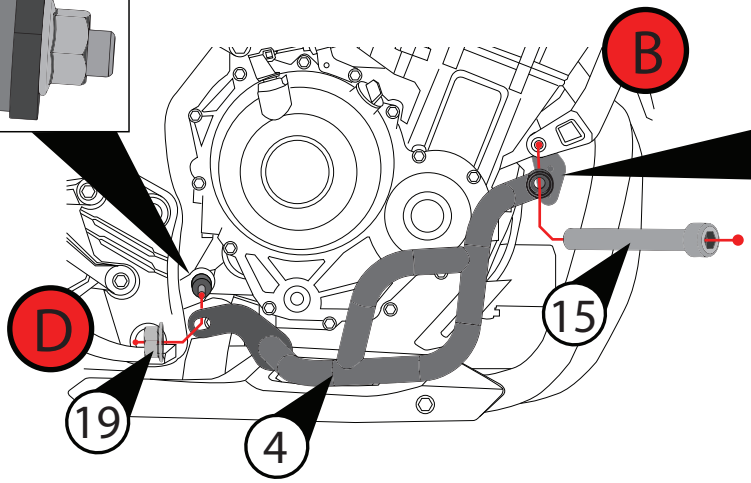

Step 7 RIGHT

Install (RIGHT)
CRASH BAR , Washer , Bolt
as illustrate

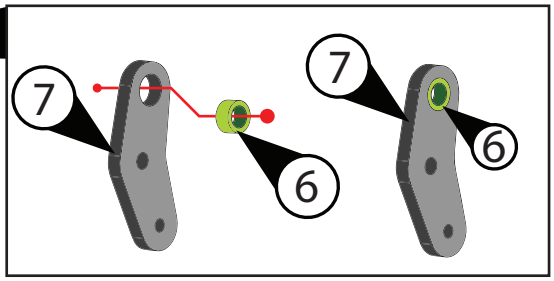

Step 8 LEFT RIGHT

Remove both original
.according to illustration
left - right

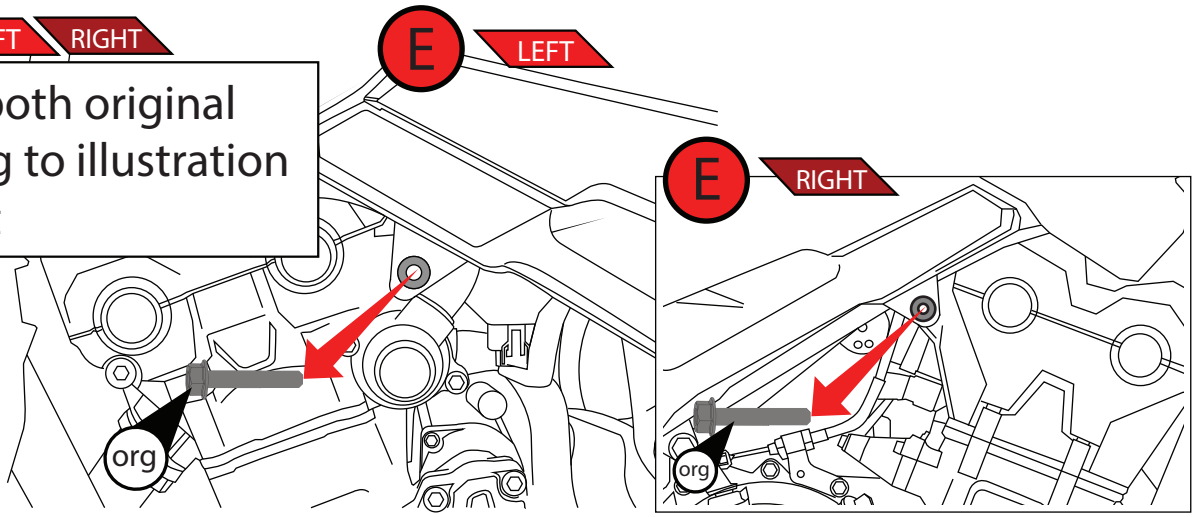

copyright By SRC
Design and Specification are subjected to change

Step 9

Install washer and M6x15 screw as illustrated

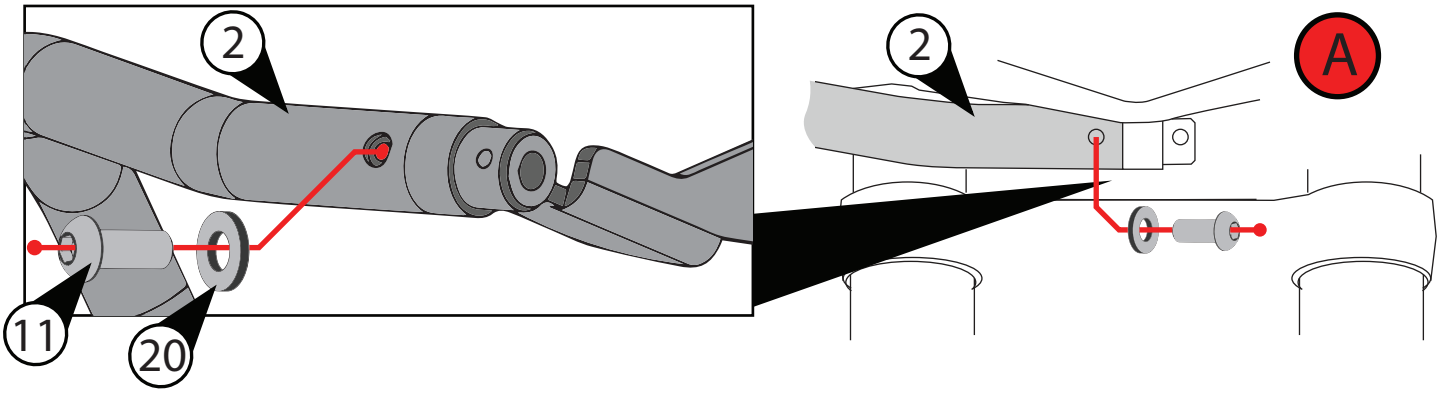

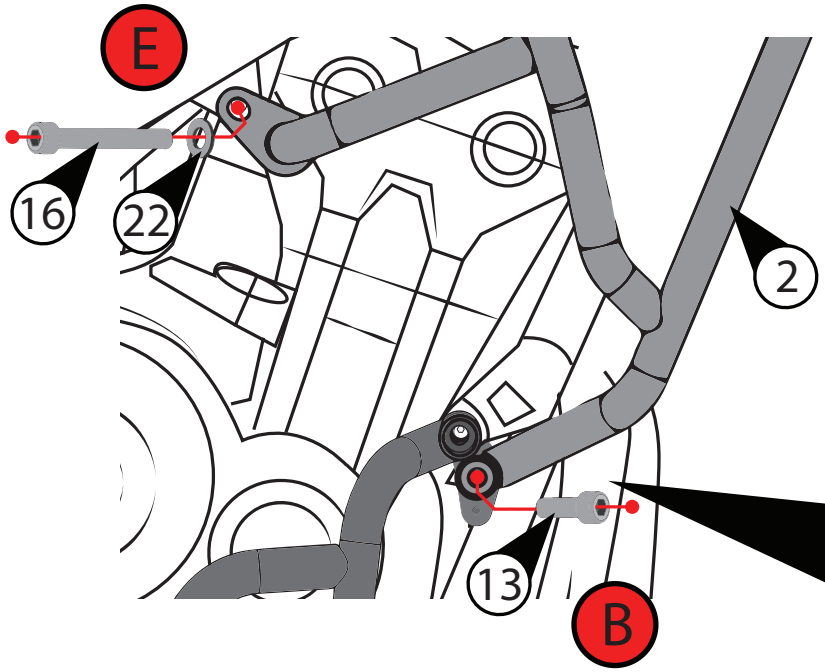

Step 10 RIGHT

Install CRASH BAR ,Washer ,Bolt as illustrate

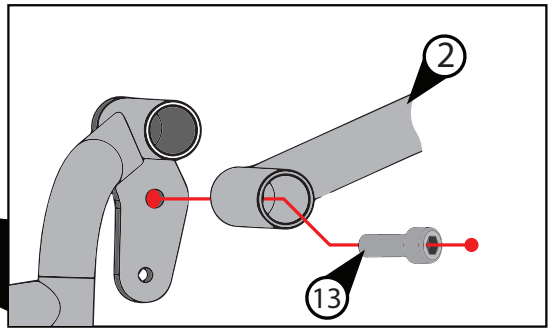

Step 11

Install washer and M6x15 screw as illustrated

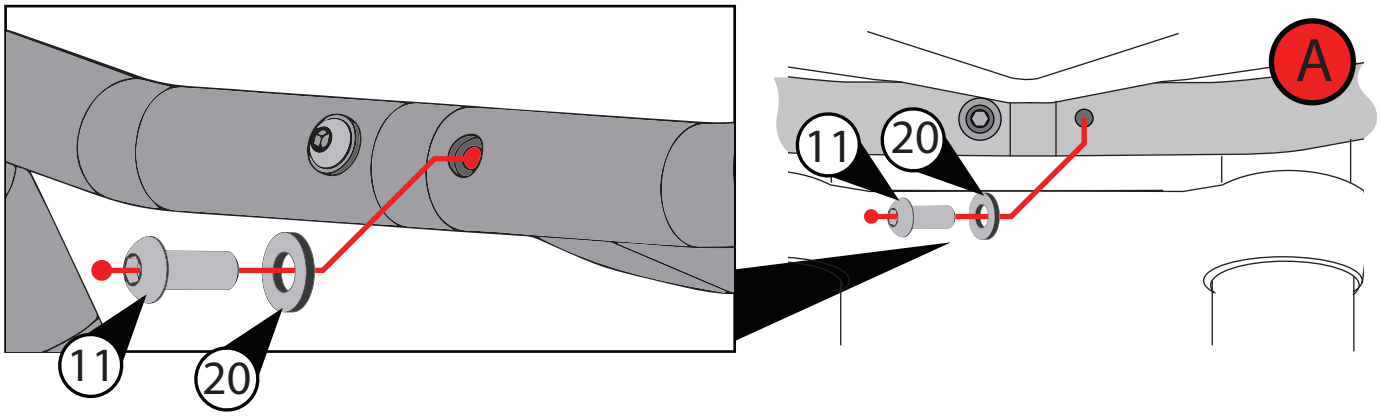

copyright By SRC
Design and Specification are subjected to change

Step 12 LEFT

Install
CRASH BAR ,Washer ,Bolt
as illustrate

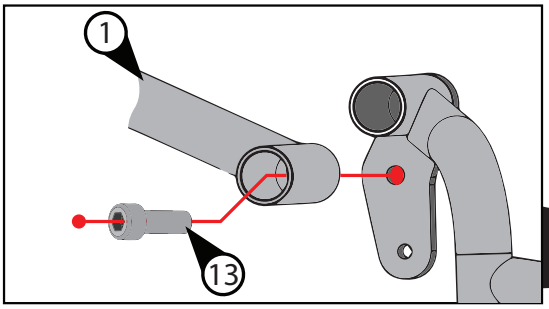

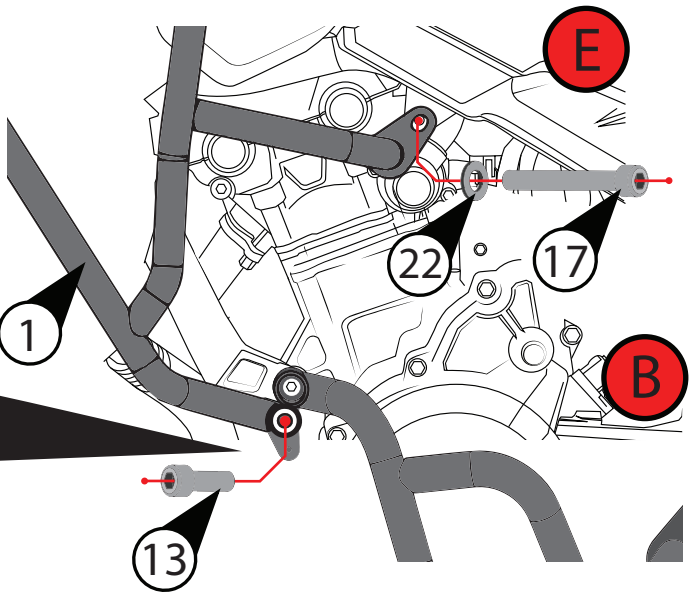

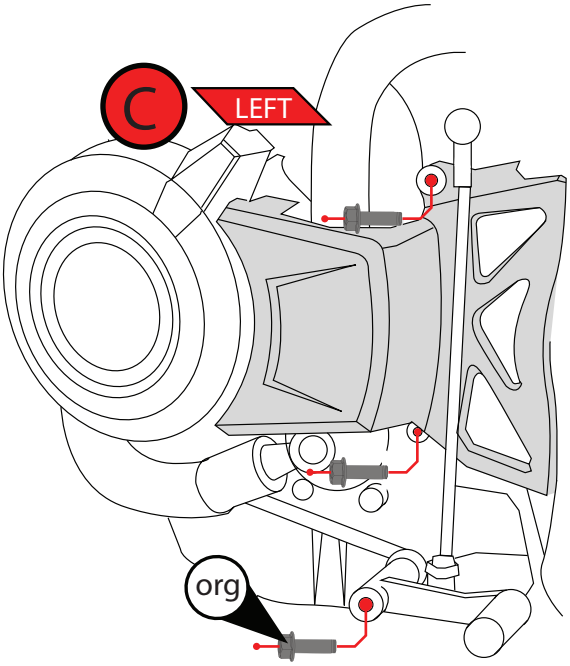

Step 13 LEFT

Left side
Install the original Bolt
and chain cover Shown in
the illustration

Step 14 LEFT RIGHT

Install Sliders Guards
on both the left-right
sides as illustrated.
Install End cap
left - right Shown in
the illustration .

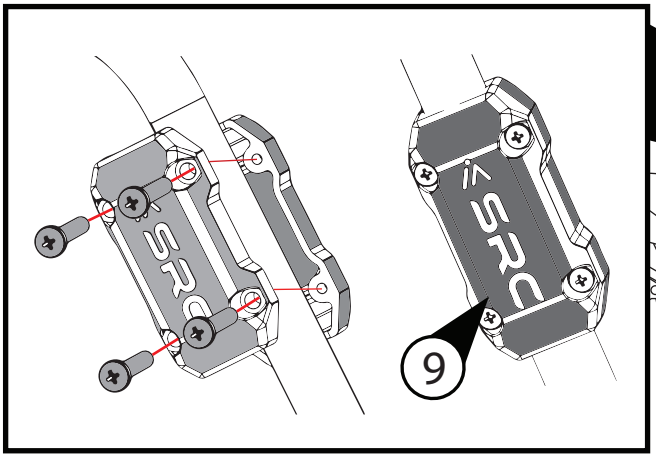

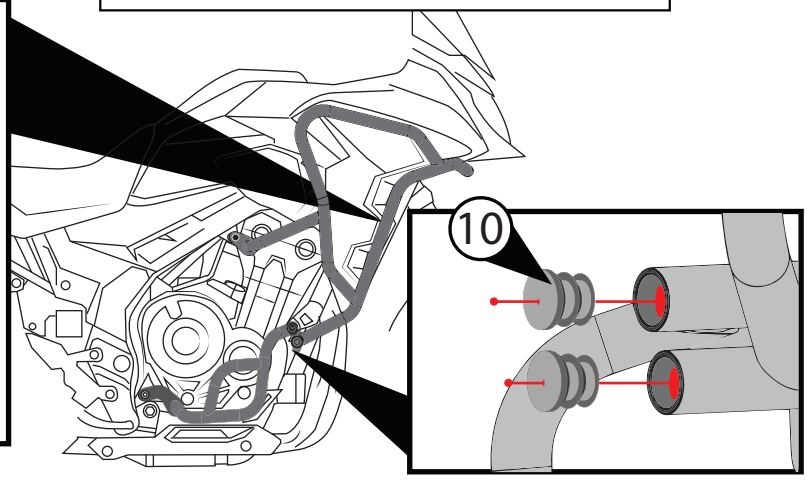

Make sure they are inserted correctly.

copyright By SRC
Design and Specification are subjected to change

(1.) We request you to pay attention to the Mounting Instructions in this document and follow the step-by-step procedures.

(2.) This Mounting Instruction manual is a "Do It Yourself" (DIY) fitment manual of the Accessory part to the Vehicle. We have prepared this based on our experience and knowledge, related to the Vehicle, Part and its functional aspects

(3.) SRC cannot guarantee the interchangeability of the parts to any other manufacturer's accessory part. It is advised to the User, to inspect and ensure the original state of all other Vehicle parts.

(4.) We request you to bear in mind, that the Installed part can change the driving behaviour and/or the stability during driving or any other dynamic conditions.

(5.)If you have the appropriate tools and another person to assist you in the mounting, it will help.

(6.) After Completion of the Mounting and before taking on a First ride, Ensure and Check all functions of the Vehicle. It is always advised to check loosening of the fasteners after the first 50 kilo meters of ride and at regular intervals.

(7.) To the maximum extent possible, our design use the current Mounting/Fitment of the Original Equipment, so that Installation of these accessories will not affect the Payload or Function of the Vehicle or the Part on which it is mounted to protect it.

(8.) If any additional modifications are to be done, prior to the fitment of the accessories, it will be explicitly specified in the instruction sheets

copyright By SRC

Design and Specification are subjected to change