Part Number: H-CT125-17-02
Part Description: CRASH BAR CT125 GEN 1/2

Installation / Parts List / Bill of Material for Mounting

NO.	Description	Quantity	Torque*(N-M)	Remarks**
1	Crash bar LH	1		
2	Crash bar RH	1		
3	Pin pipe	1		
4	Ring AL OD20xID9xL5	2		
5	Sliders Guards	2		
6	End cap	2		
7	Socket button head screw M6x15mm	2		Use Liquid Thread Locker
8	Socket countersunk head screw M5x15	4		Use Liquid Thread Locker
9	Socket countersunk head screw M8x25	2		Use Liquid Thread Locker
10	Countersunk Washer M5	2		
11	Countersunk Washer M8	4		
12	Washer M6	2		
SRC Design uses Metric System of Measurement and all dimensions in Millimeters				
Recommended to use the Torque specified in the table				
Denotes Usage of Liquid Thread Locker in specified Locations				

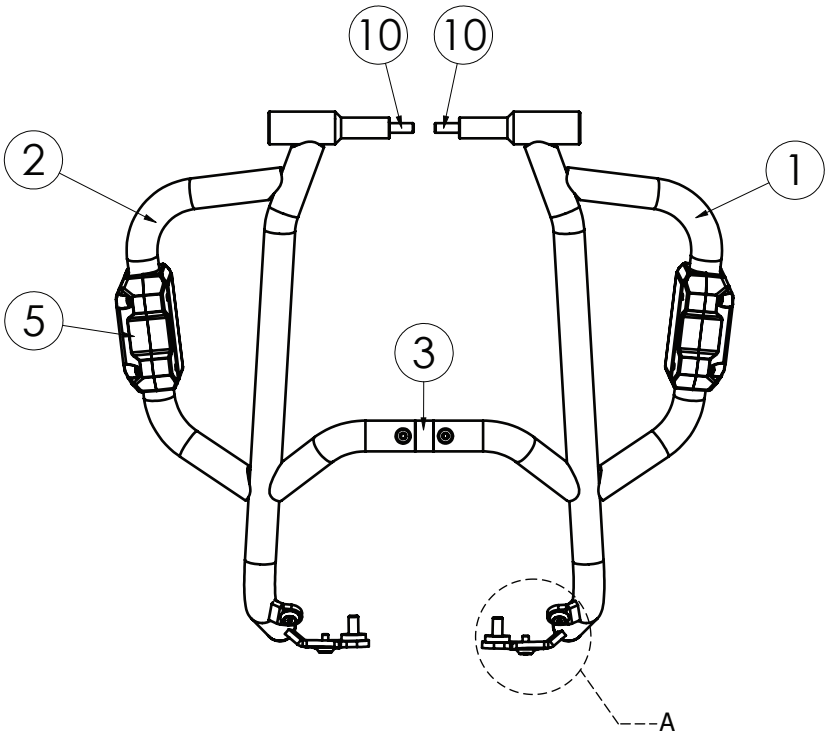

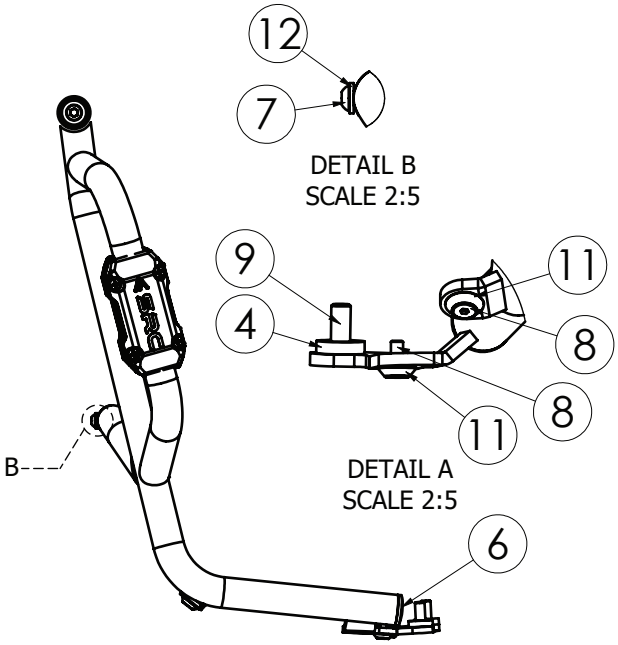

copyright By SRC
Design and Specification are subjected to change

Torque Values to be used in Mounting Instructions



	code	M4 (cs)	M4 (Fo)	M5 (cs)	M5 (Fo)	M6 (cs)	M6 (Fo)	M8 (cs)	M8 (Fo)	M10 (cs)	M10 (Fo)	M12 (cs)	M12 (Fo)	M14 (cs)	M14 (Fo)	M16 (cs)	M16 (Fo)	M18 (cs)	M18 (Fo)
Inox ▶	A2	2.6	—	5.1	—	8.7	—	21.2	—	42	—	73	—	118	—	180	—	258	—
steel ▶	8.8	3	3,594	5	5,886	10	8,302	23	15,242	46	24,275	79	35.401	127	48,618	198	66,955	283	83,746
steel ▶	10.9	4	5,279	8.1	8,645	14	12,194	34	22,388	67	35,655	116	51,995	187	71,408	291	98,340	402	119,454

Tensile load (Fo)
The force in newtons (N)which maintains pressure contact between assembled componets
Tightening torque (Cs)[values are in N-m]

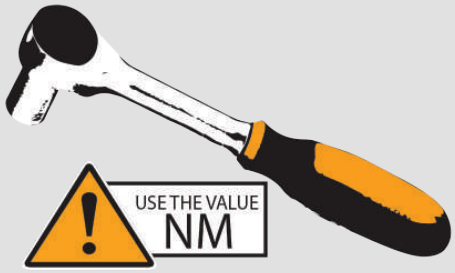

symbol (NM), refer to the reference value given in the table above for use in the required operation And safe in operation and accuracy in inserting parts.



The tool in the picture is (thread locked).
When you see this mark,please insert the medicine to the point where the nut is to be inserted for the firmness and accuracy of the insertion work.

Please check and check again to make sure that all are inserted.
Every piece and don't forget any step to be safe.

copyright By SRC
Design and Specification are subjected to change

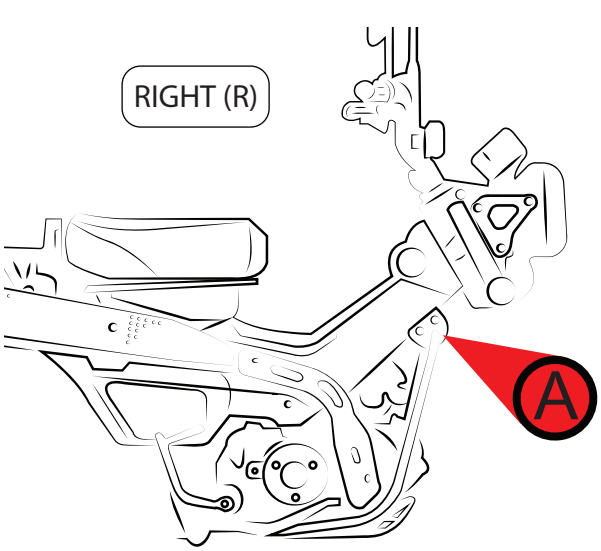

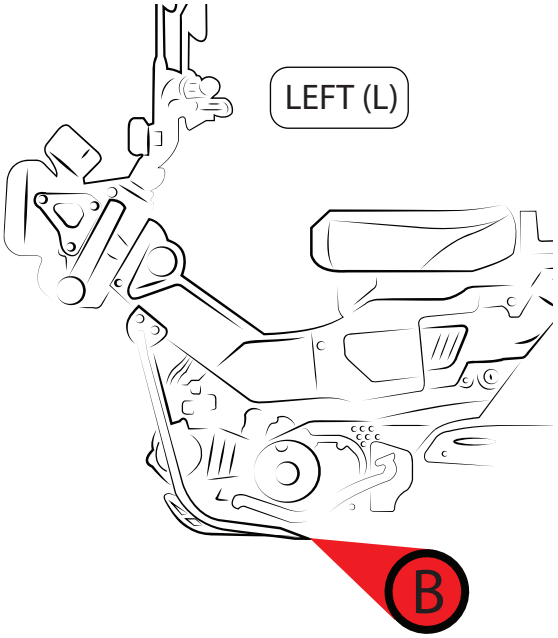

1

Remove the original plastic pins
left - right.
Remove the spare parts.

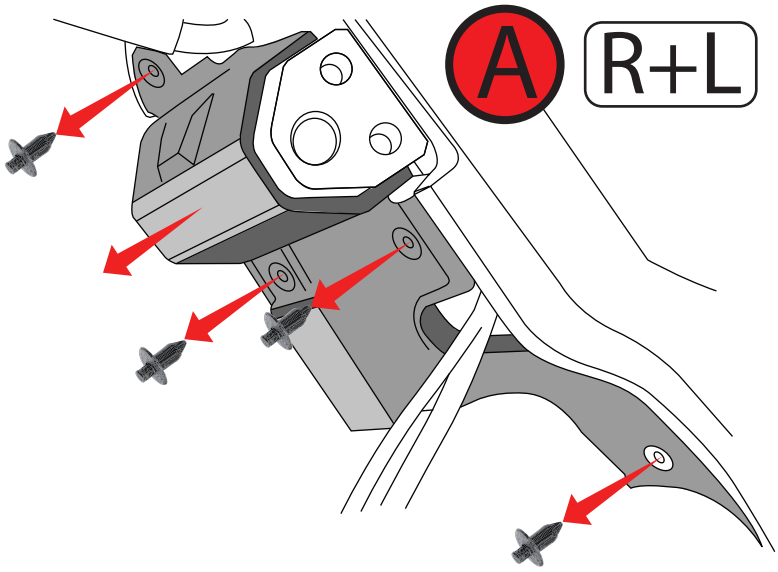

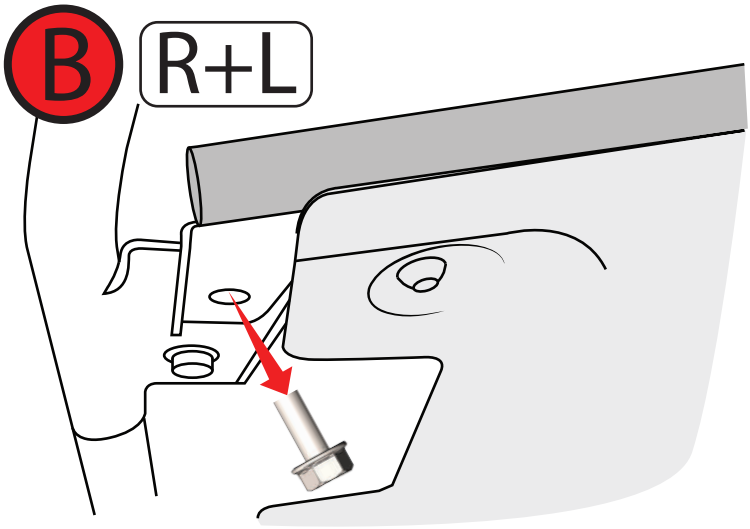

2

Remove the original Bolt
On the south side of the
motorcycle as illustrated.

copyright By SRC
Design and Specification are subjected to change

3

Remove the original Bolt,
both left - right.

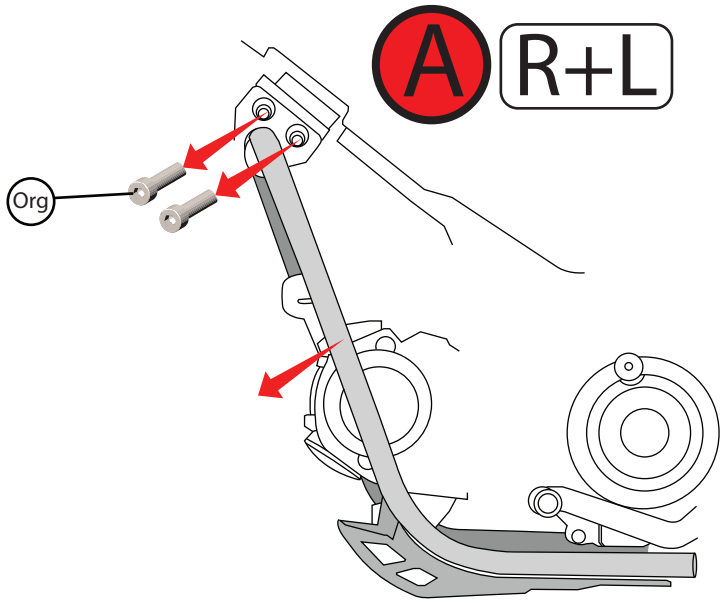

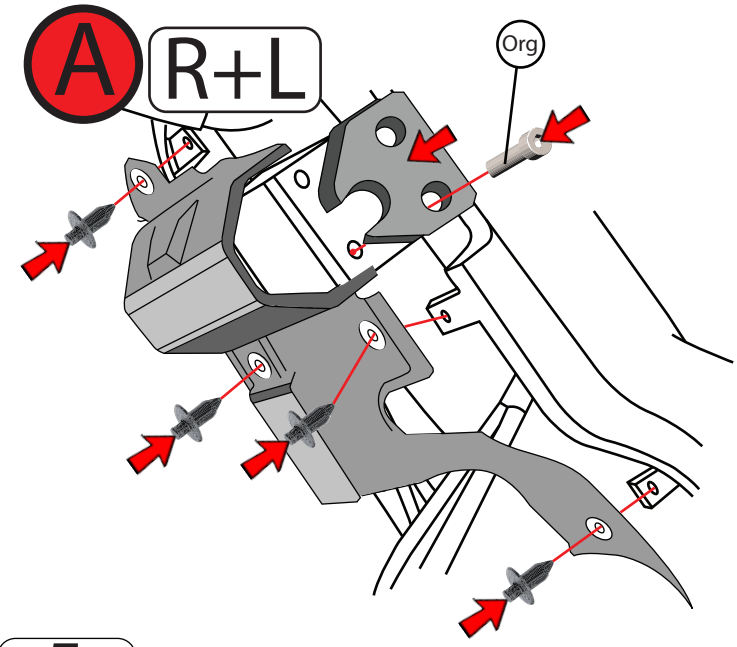

4

Install the original spare parts ,
plastic pins
left - right.
Install the original Bolt,

5

side top:
Install the Bolt, Crash bar
side below:
Install BUSH as illustrated.

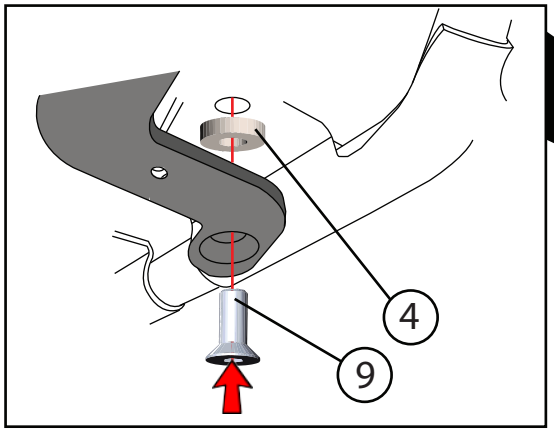

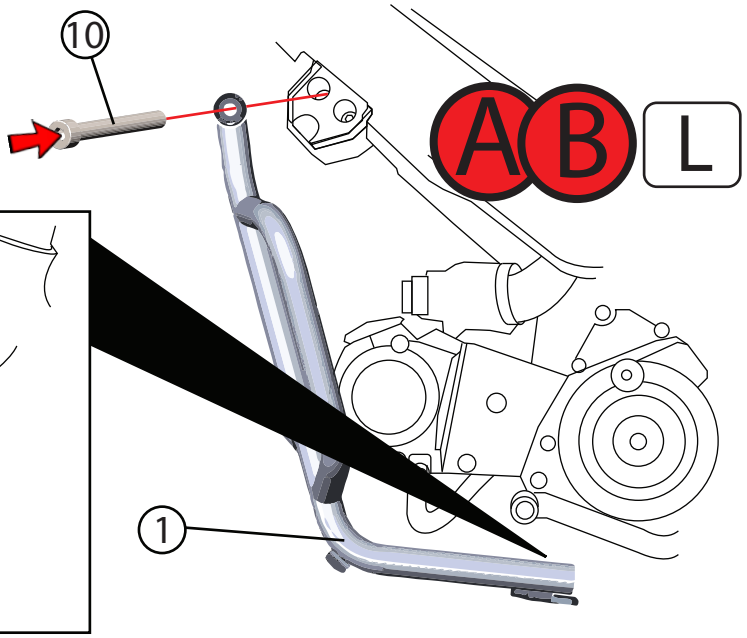

copyright By SRC
Design and Specification are subjected to change

6

Prepare the parts and assemble according to the illustration.

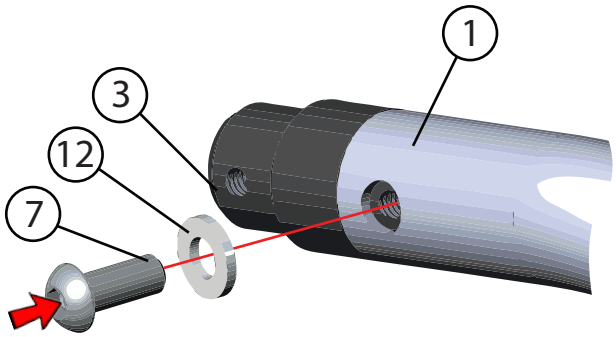

AB R

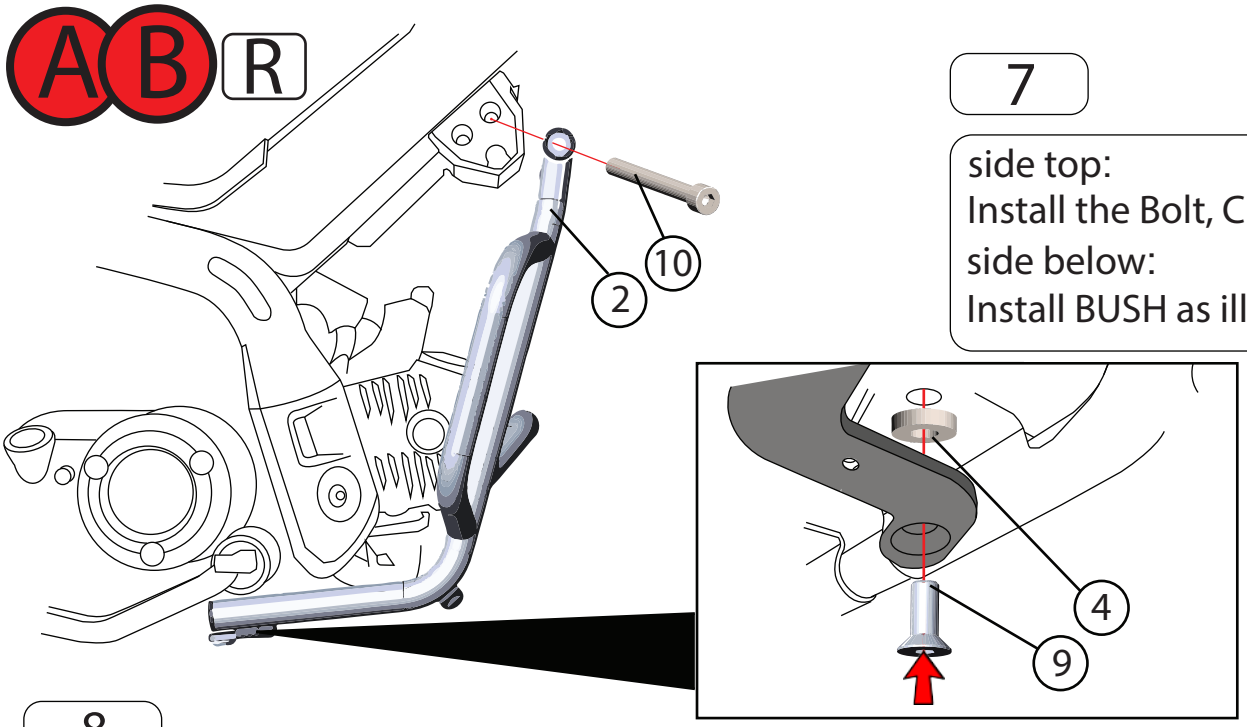

7

side top:
Install the Bolt, Crash bar
side below:
Install BUSH as illustrated.

8

Install the original Engine guard ,Countersunk Washer M5 ,screws

B R+L

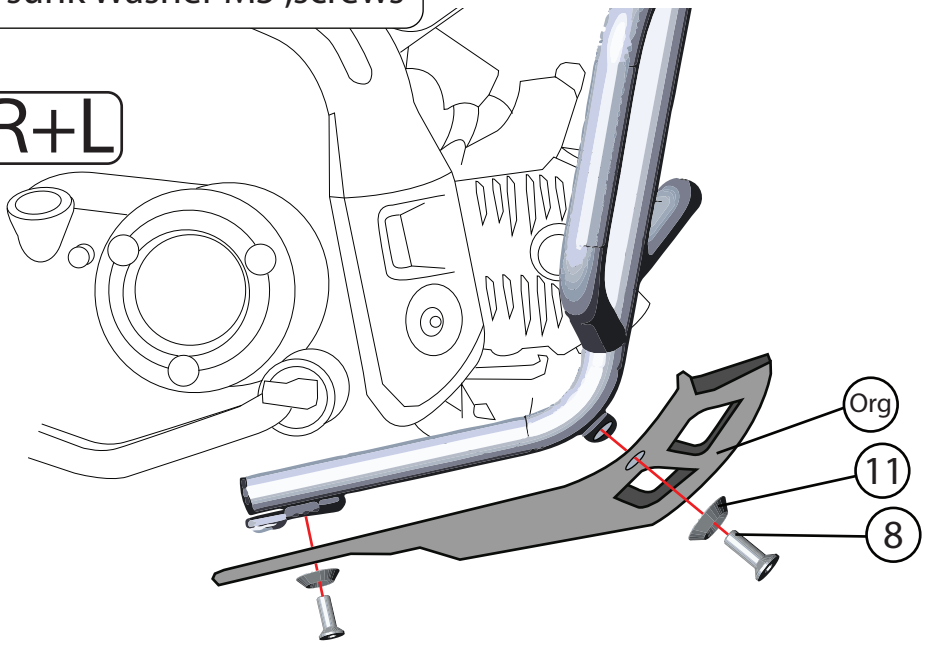

copyright By SRC
Design and Specification are subjected to change

6

insert(sliders guards)
left - right. as illustrated

A R+L

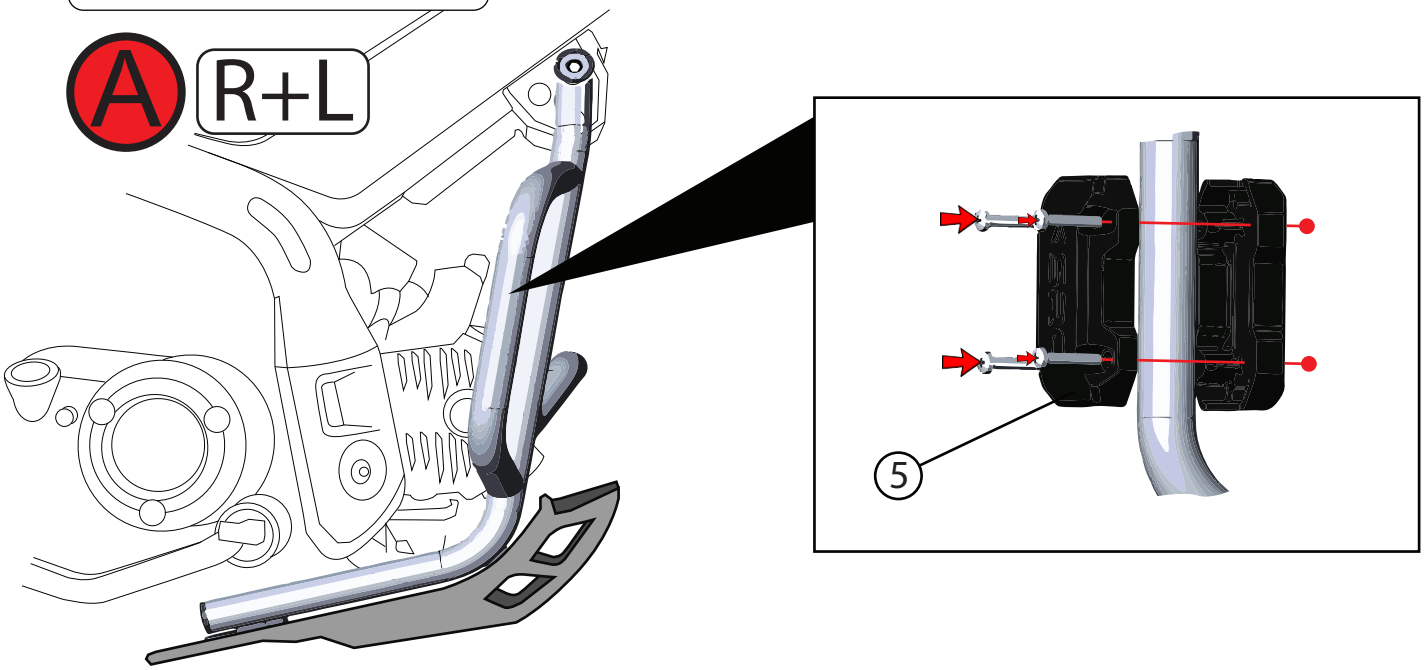

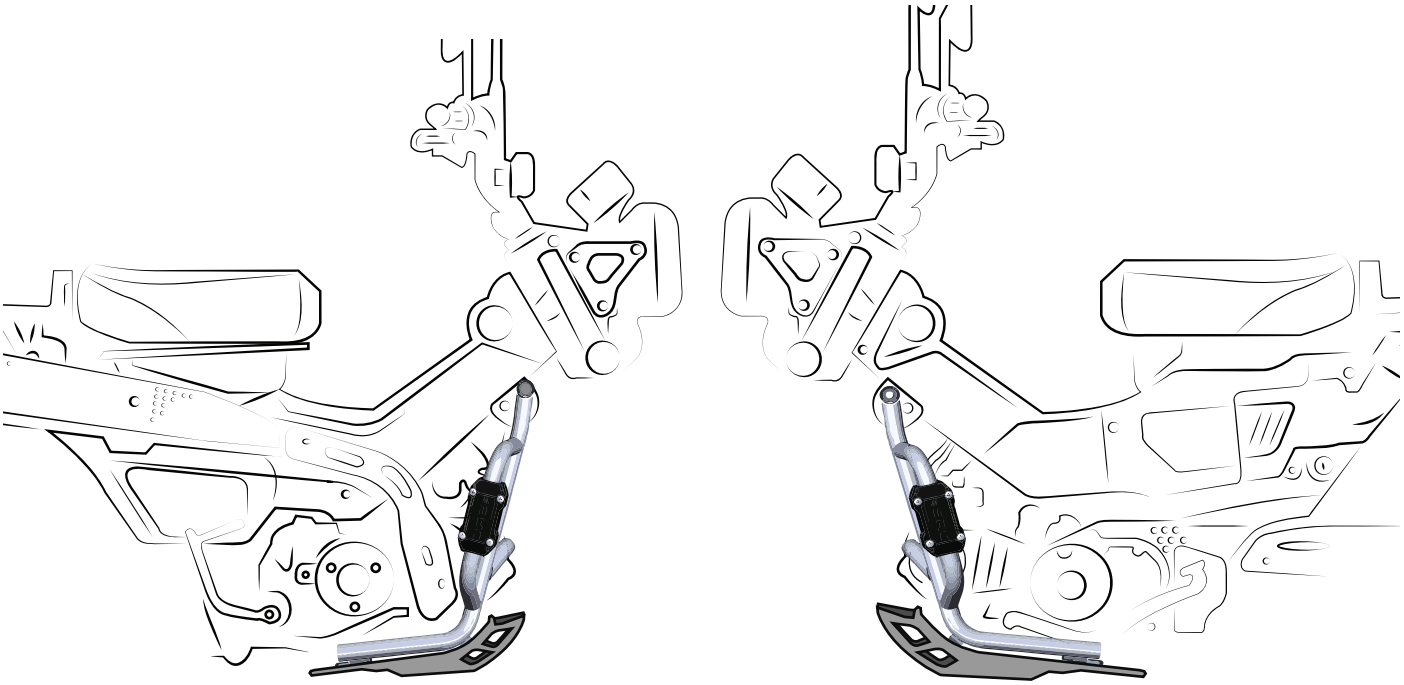

Make sure they are inserted correctly.

copyright By SRC
Design and Specification are subjected to change

General Instructions

(1.) We request you to pay attention to the Mounting Instructions in this document and follow the step-by-step procedures.

(2.) This Mounting Instruction manual is a "Do It Yourself" (DIY) fitment manual of the Accessory part to the Vehicle. We have prepared this based on our experience and knowledge, related to the Vehicle, Part and its functional aspects

(3.) SRC cannot guarantee the interchangeability of the parts to any other manufacturer's accessory part. It is advised to the User, to inspect and ensure the original state of all other Vehicle parts.

(4.) We request you to bear in mind, that the Installed part can change the driving behaviour and/or the stability during driving or any other dynamic conditions.

(5.)If you have the appropriate tools and another person to assist you in the mounting, it will help.

(6.) After Completion of the Mounting and before taking on a First ride, Ensure and Check all functions of the Vehicle. It is always advised to check loosening of the fasteners after the first 50 kilo meters of ride and at regular intervals.

(7.) To the maximum extent possible, our design use the current Mounting/Fitment of the Original Equipment, so that Installation of these accessories will not affect the Payload or Function of the Vehicle or the Part on which it is mounted to protect it.

(8.) If any additional modifications are to be done, prior to the fitment of the accessories, it will be explicitly specified in the instruction sheets

copyright By SRC

Design and Specification are subjected to change