Part Number: K-KLR650-V2-17-02
Part Description: CRASH BAR KLR650 (2021)

Installation / Parts List / Bill of Material for Mounting

NO.	Description	Quantity	Torque*(N-M)	Remarks**
1	Crash bar LH	1		
2	Crash bar RH	1		
3	Pin pipe	1		
4	RUBBER PLATE	2		
5	Bracket LH	1		
6	Bracket RH	1		
7	Sliders Guards	2		
8	Bush urethane M8	4		
9	Socket button head screw M6x15	2		Use Liquid Thread Locker
10	Socket head cap screw M8x40	2		Use Liquid Thread Locker
11	Socket head cap screw M8x110	2		Use Liquid Thread Locker
12	Hex flange nut M8	2		
13	Washer M6	2		
14	Washer M8	4		

SRC Design uses Metric System of Measurement and all dimensions in Millimeters

Recommended to use the Torque specified in the table

Denotes Usage of Liquid Thread Locker in specified Locations

copyright By SRC
Design and Specification are subjected to change

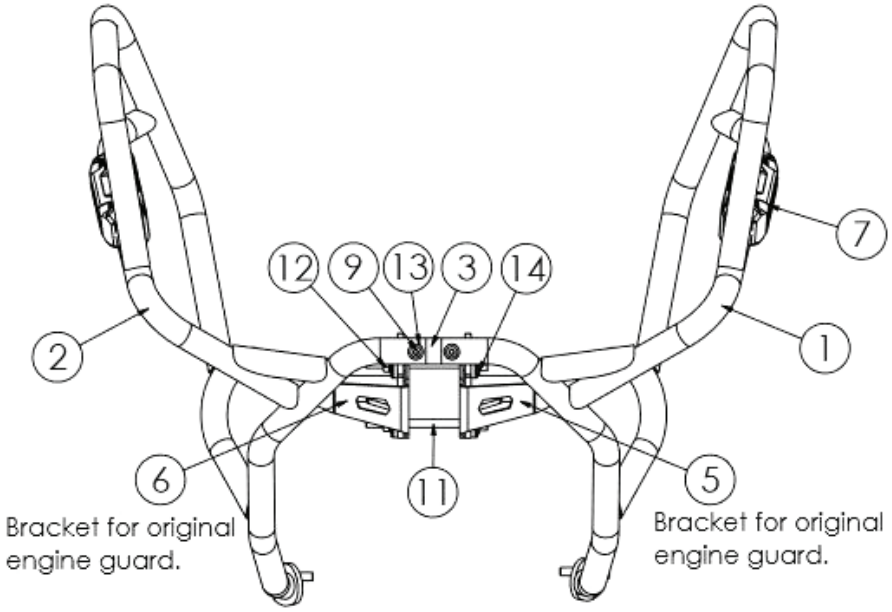

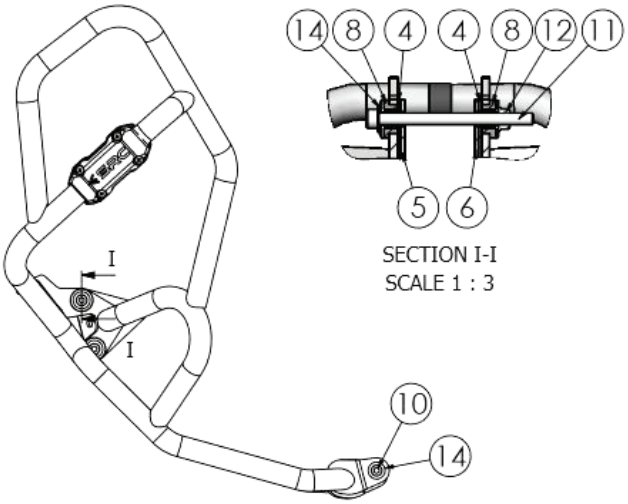

SECTION I-I
SCALE 1 : 3

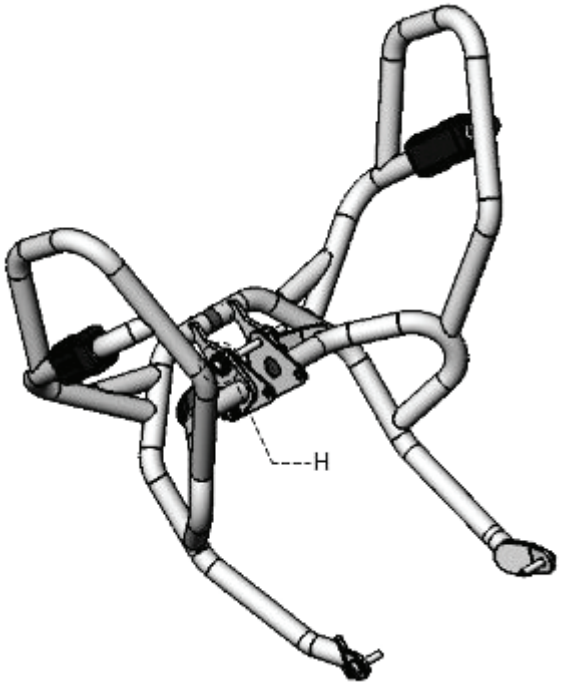

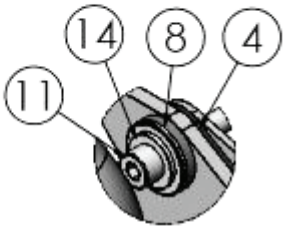

DETAIL H
SCALE 1:2

copyright By SRC
Design and Specification are subjected to change

Torque Values to be used in Mounting Instructions

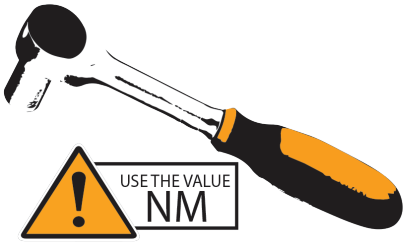

		M4		M5		M6		M8		M10		M12		M14		M16		M18	
	code	(cs)	(Fo)	(cs)	(Fo)	(cs)	(Fo)	(cs)	(Fo)	(cs)	(Fo)	(cs)	(Fo)	(cs)	(Fo)	(cs)	(Fo)	(cs)	(Fo)
Inox ▶	A2	2.6	—	5.1	—	8.7	—	21.2	—	42	—	73	—	118	—	180	—	258	—
steel ▶	8.8	3	3,594	5	5,886	10	8,302	23	15,242	46	24,275	79	35.401	127	48,618	198	66,955	283	83,746
steel ▶	10.9	4	5,279	8.1	8,645	14	12,194	34	22,388	67	35,655	116	51,995	187	71,408	291	98,340	402	119,454

Tensile load (Fo)
The force in newtons (N)which maintains pressure contact between assembled componets
Tightening torque (Cs)[values are in N-m]

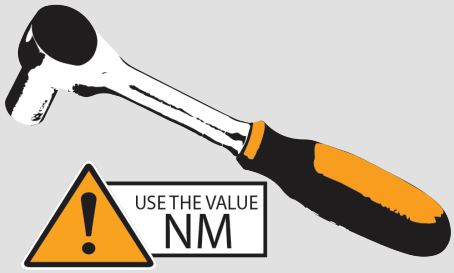

symbol (NM), refer to the reference value given in the table above for use in the required operation And safe in operation and accuracy in inserting parts.



The tool in the picture is (thread locked).
When you see this mark,please insert the medicine to the point where the nut is to be inserted for the firmness and accuracy of the insertion work.

Please check and check again to make sure that all are inserted.
Every piece and don't forget any step to be safe.

copyright By SRC
Design and Specification are subjected to change

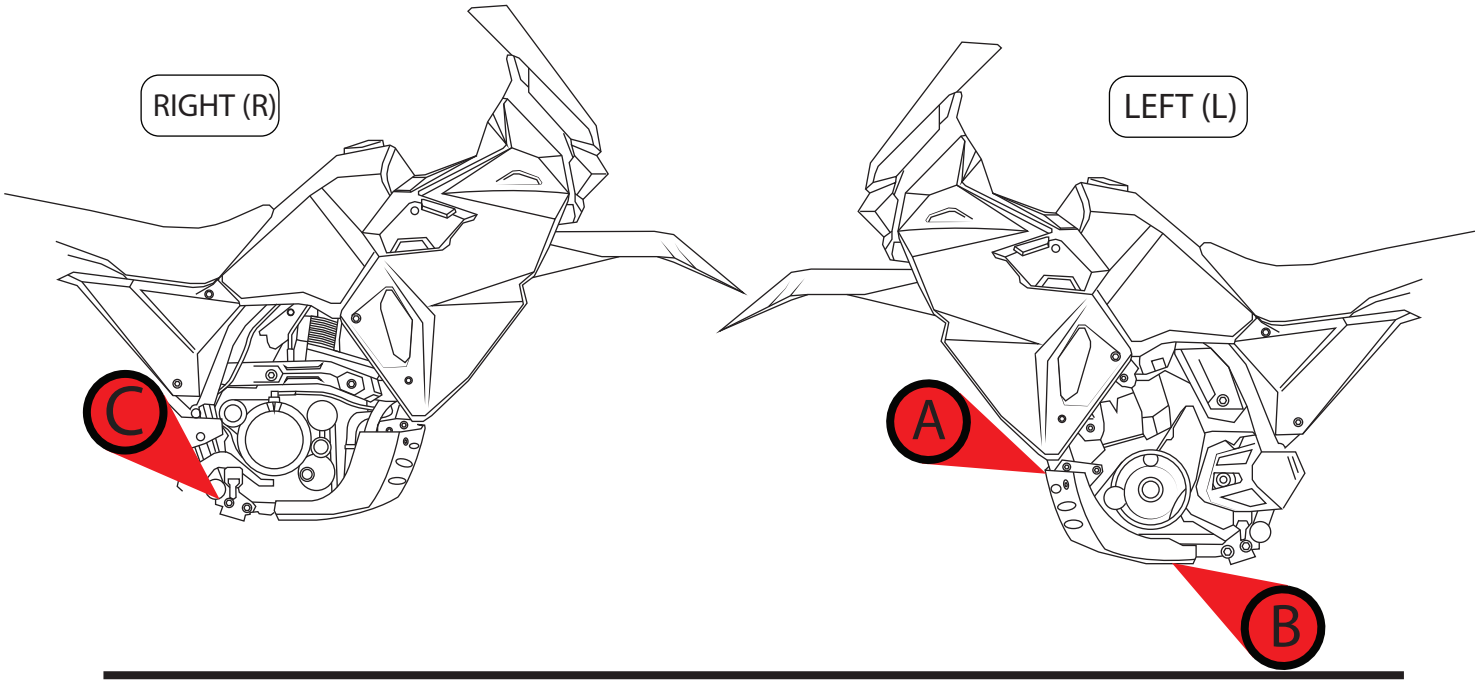

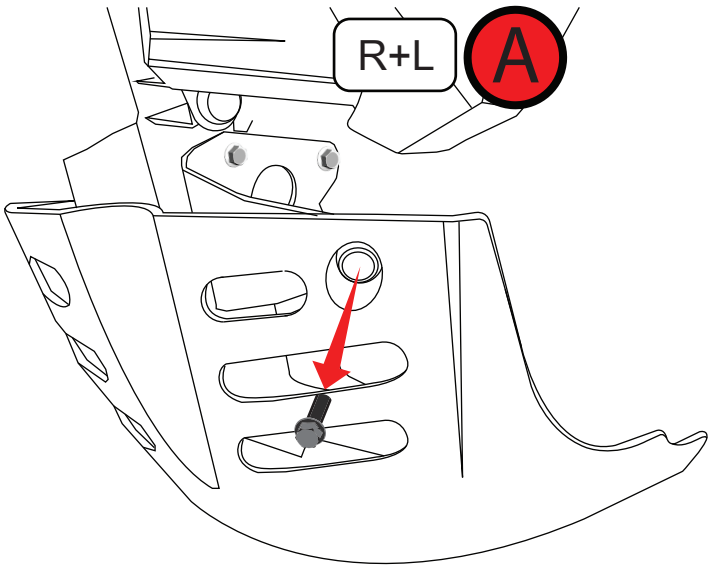

1

Remove the original Bolt, both left - right.

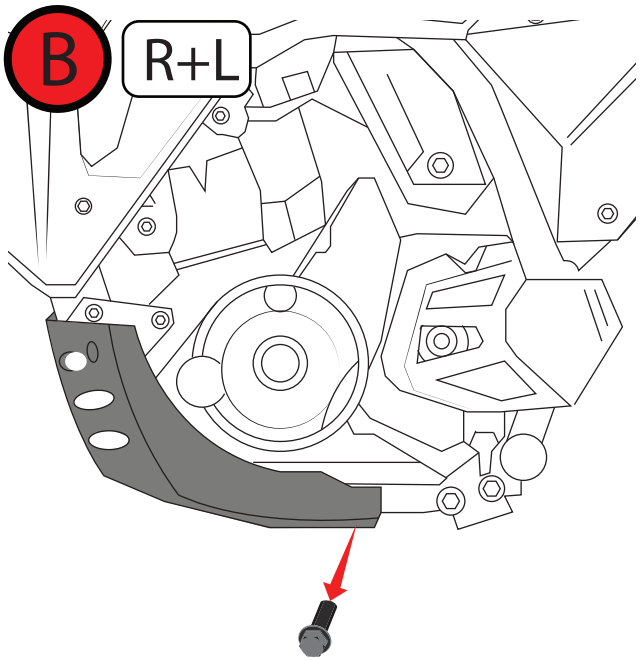

2

Remove the original Bolt below both left -right and original engine guard

copyright By SRC
Design and Specification are subjected to change

3

Right side
remove the original nut [all 3 points] and braket as illustrated

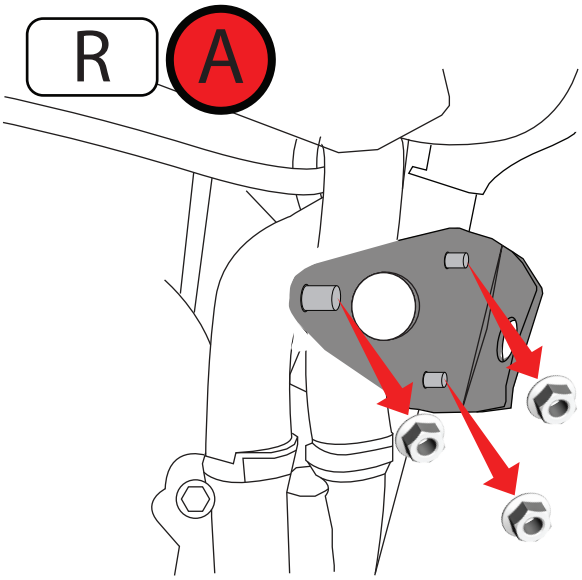

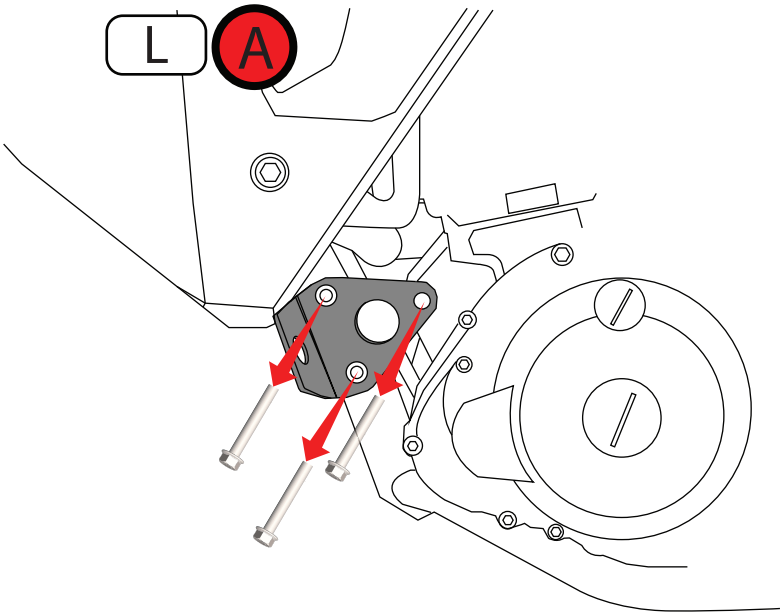

4

Left side
remove the original Bolt [all 3 points] and bracket as illustrated

5

Remove the first original bolt below the left-right footboard as illustrated

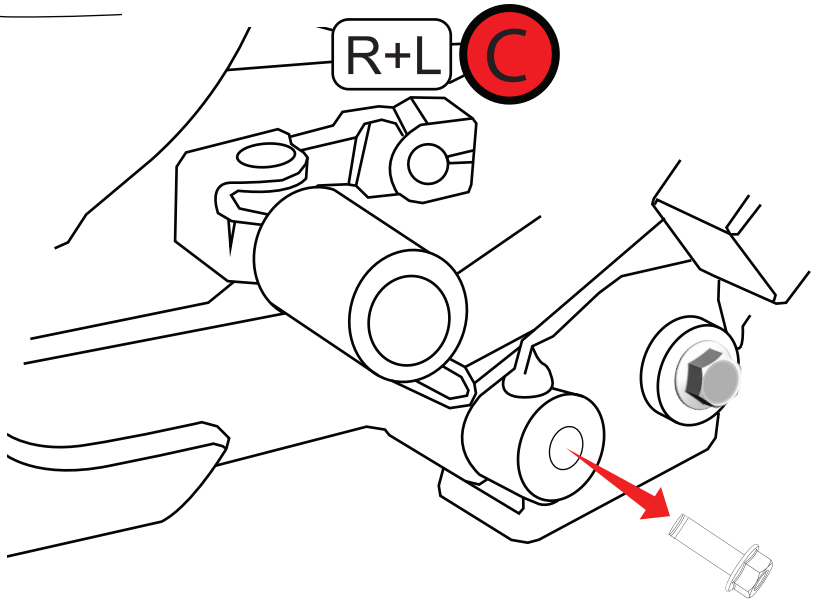

copyright By SRC
Design and Specification are subjected to change

6

Bring the braket [LH]-[RH] fix the original bolt and nut as shown in the illustration

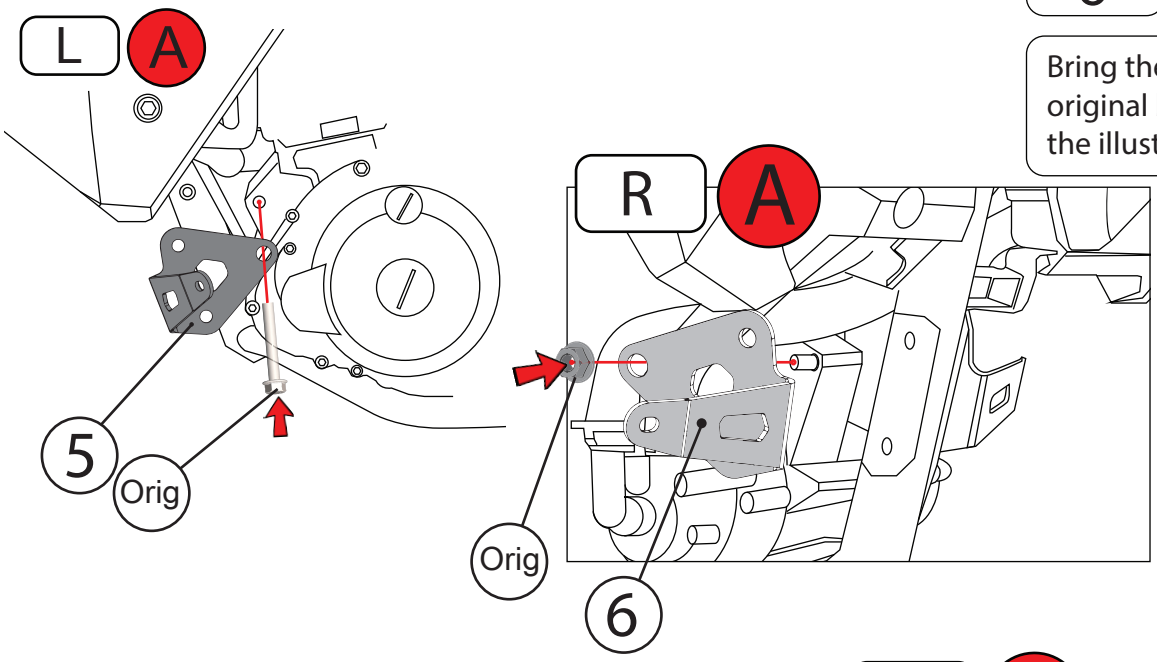

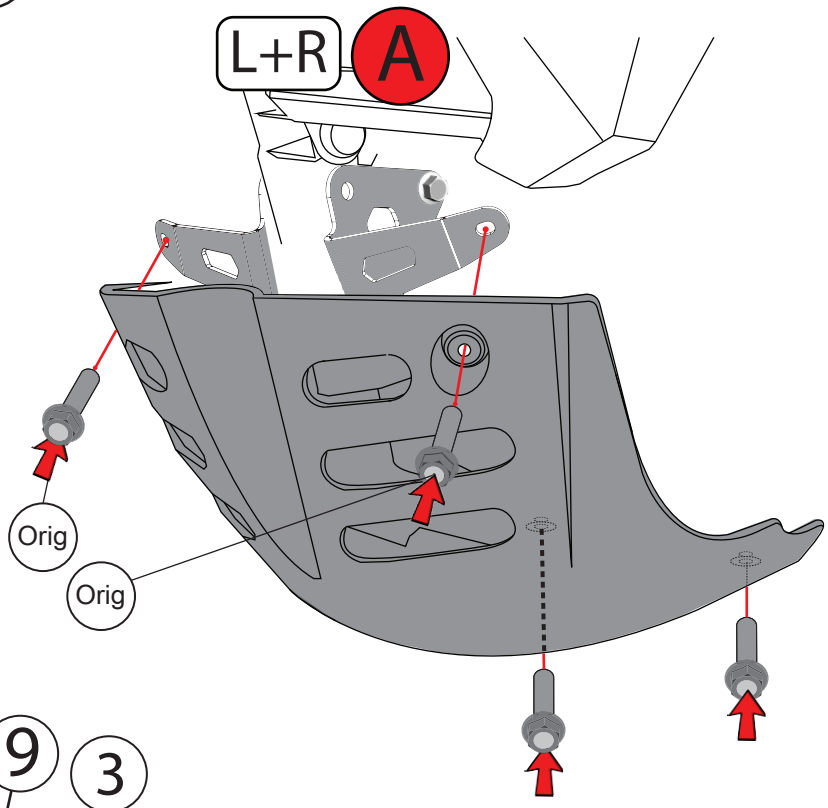

7

Install the original engine guard and the bolts [all 4 points] as illustrated

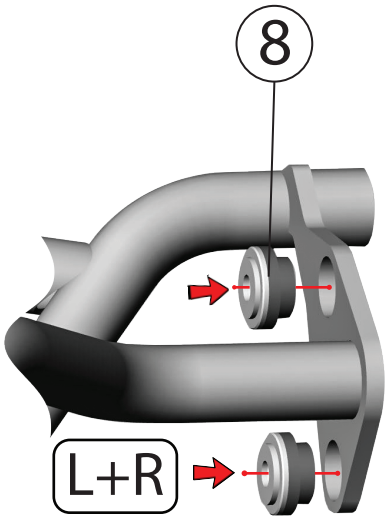

Put urethane bushings on the crash bar bracket left and right sides

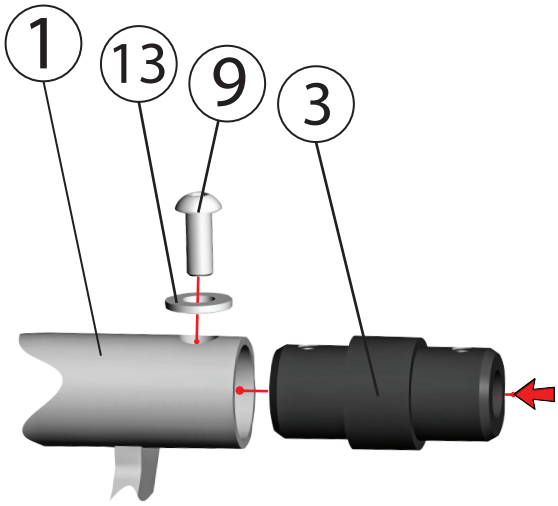

8

Put pin pipe to the crash bar the left side. Install washer and M6x15 screw as illustrated

copyright By SRC
Design and Specification are subjected to change

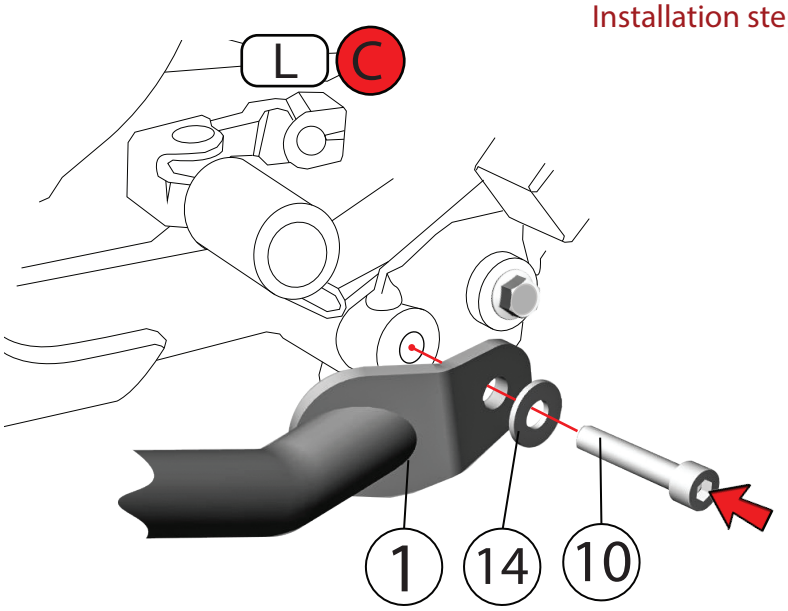

9

Install Crash bar Lh.

Install washer and M8x40Bolt
as illustrated.[Lock the bolt loose first]

10

Install
RUBBER PLATE,CRASH BAR ,
Washer ,Bolt as illustrated

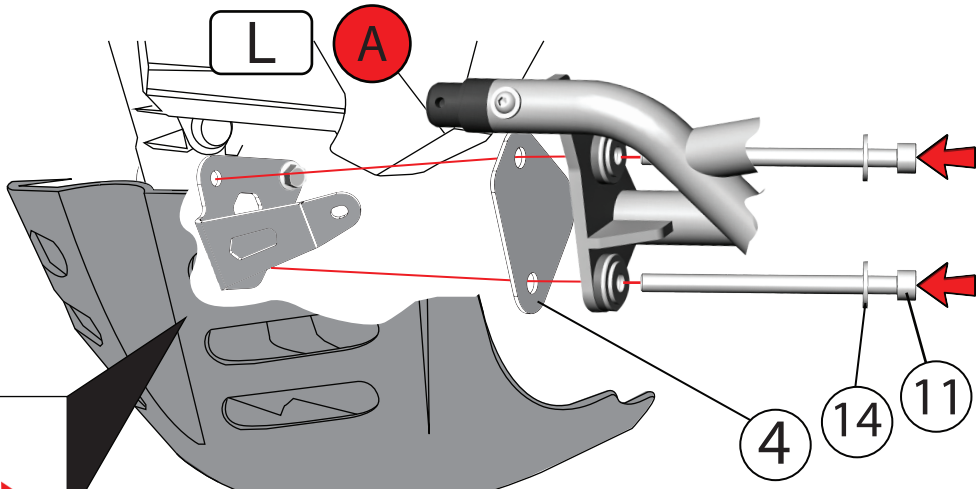

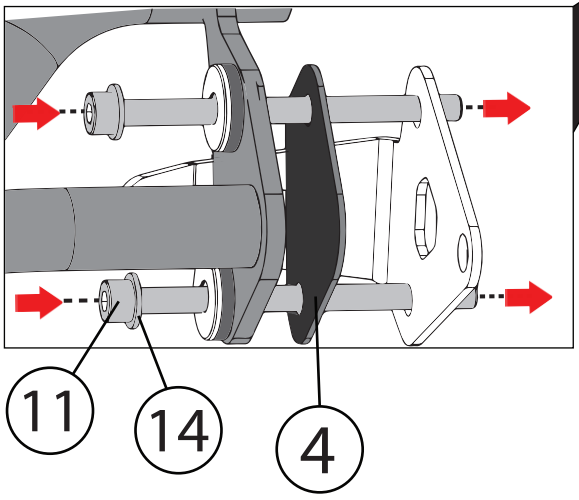

Preview image
installation

11

Install Crash bar RH

Install washer and M8x40 bolt
as illustrated .
[Lock the bolt loose first]

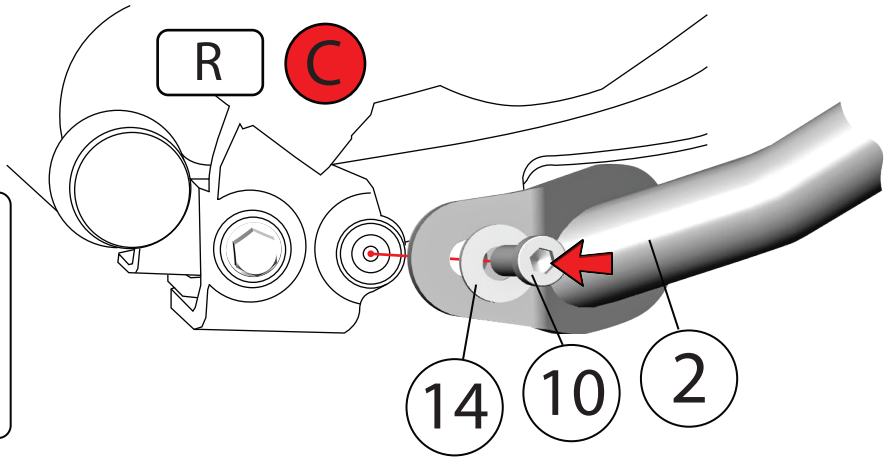

copyright By SRC
Design and Specification are subjected to change

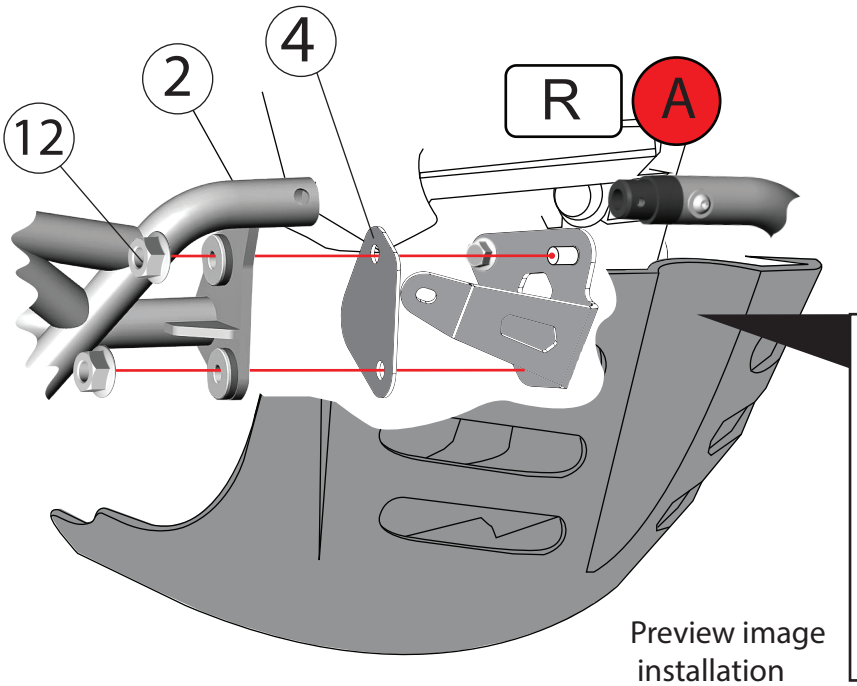

12

Install
RUBBER PLATE, CRASH BAR Nut
as illustrated

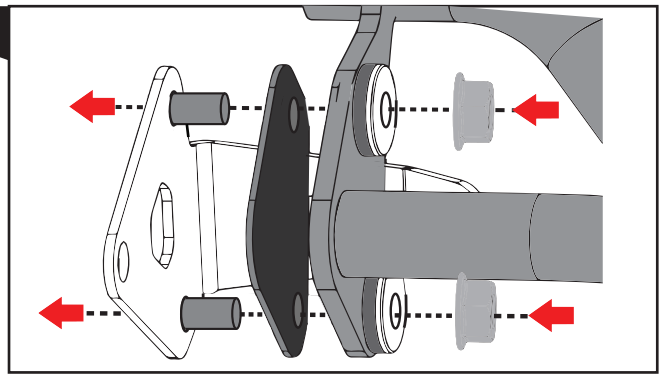

Preview image
installation

13

Install washer and M6x15 screw
as illustrated.

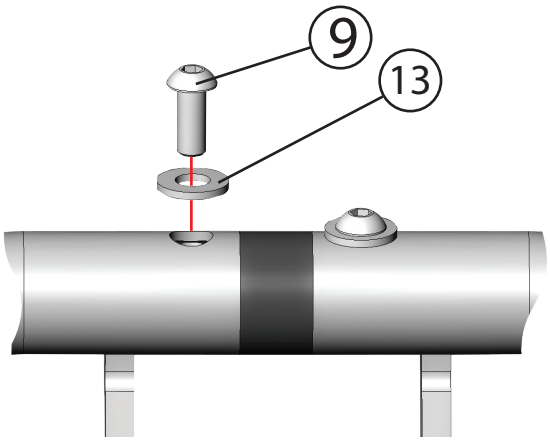

14

Install Sliders Guards
on both the left-right sides
as illustrated.

R+L

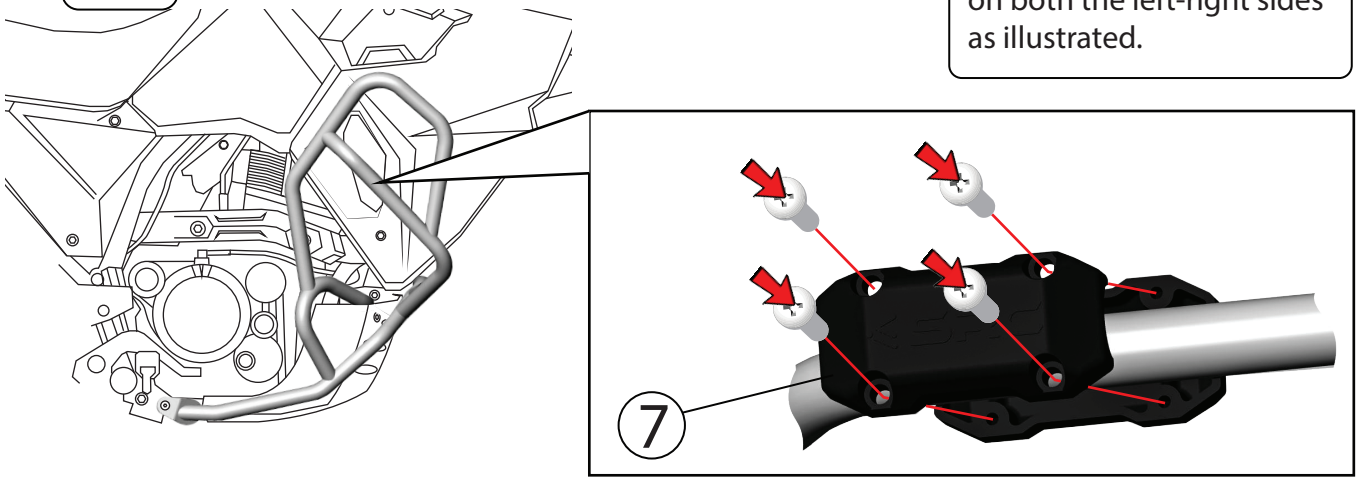

Please check the tightness of the bolts at all mounting points.

copyright By SRC
Design and Specification are subjected to change

General Instructions

(1.) We request you to pay attention to the Mounting Instructions in this document and follow the step-by-step procedures.

(2.) This Mounting Instruction manual is a "Do It Yourself" (DIY) fitment manual of the Accessory part to the Vehicle. We have prepared this based on our experience and knowledge, related to the Vehicle, Part and its functional aspects

(3.) SRC cannot guarantee the interchangeability of the parts to any other manufacturer's accessory part. It is advised to the User, to inspect and ensure the original state of all other Vehicle parts.

(4.) We request you to bear in mind, that the Installed part can change the driving behaviour and/or the stability during driving or any other dynamic conditions.

(5.)If you have the appropriate tools and another person to assist you in the mounting, it will help.

(6.) After Completion of the Mounting and before taking on a First ride, Ensure and Check all functions of the Vehicle. It is always advised to check loosening of the fasteners after the first 50 kilo meters of ride and at regular intervals.

(7.) To the maximum extent possible, our design use the current Mounting/Fitment of the Original Equipment, so that Installation of these accessories will not affect the Payload or Function of the Vehicle or the Part on which it is mounted to protect it.

(8.) If any additional modifications are to be done, prior to the fitment of the accessories, it will be explicitly specified in the instruction sheets

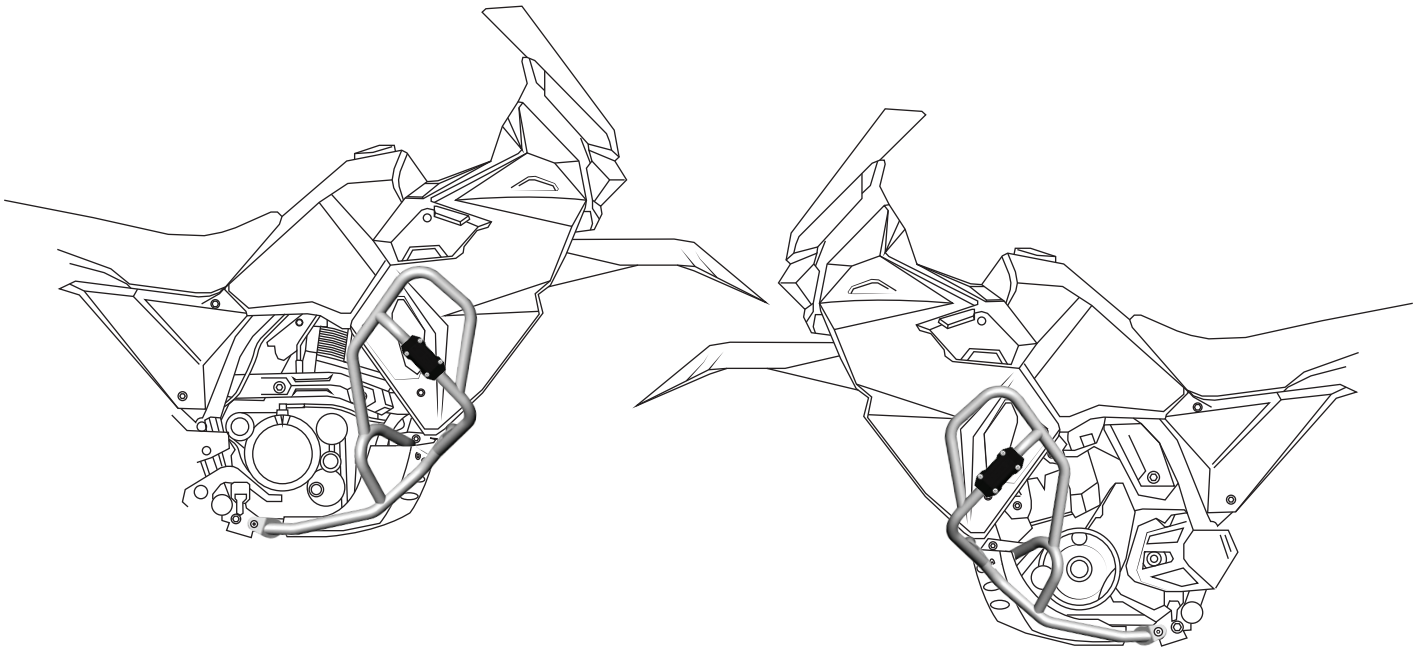

copyright By SRC

Design and Specification are subjected to change